LAMPIRAN I

KUESIONER PENELITIAN

KUISIONER

Bersama ini saya sampaikan daftar pertanyaan kepada pelanggan klinik kecantikan Beauty Inc permohonan agar berkenaan kiranya meluangkan waktu untuk mengisinya.

Pertanyaan dalam kuesioner ini berkenaan dengan penelitian saya yang berjudul "Pengaruh kualitas pelayanan dan kepercayaan terhadap loyalitas pelanggan dimediasi kepuasan pelanggan". Atas kesediaan dalam memberikan jawaban, sebelum dan sesudahnya saya ucapkan terima kasih.

No. Responden

1. DATA RESPONDEN

Petunjuk :

Isilah data responden dibawah ini kemudian pilihan jawaban yang tersedia dengan tanda silang (X).

1. Usia
   a. 17 - 22 tahun
   b. 23 - 28 tahun
   c. 29 – 34 tahun
   d. >35 tahun
2. Pendidikan terakhir
   a. SMA Sederajat
   b. S1/S2/S3 Sederajat

3. Pekerjaan
    a. S1/S2/S3
    b. PNS
    c. Wirausaha
    d. Karyawan Swasta
    e. Dan lain-lain, pilahan (e) ini sesuai dengan responden……..
4. Pengeluaran perbulan untuk perawatan di Beauty Inc
    a. < Rp. 2.000.000
    b. Rp. 2.000.001 – Rp. 4.000.000
    c. Rp. 4.000.001 – Rp. 6.000.000
    d. > Rp. 6.000.001
5. Sudah berapa lama menggunakan jasa Beauty Inc
    a. 5 – 9 kali kedatangan
    b. > 10 kali kedatangan
6. Pernah berpindah ke klinik kecantikan lainnya
    a. Ya
    b. Tidak

    Jika jawab "Ya" sebutkan nama klinik kecantikannya : …….

PETUNJUK

Isilah semua pertanyaan dalam kuesioner sesuai dengan kenyataan dengan cara memberikan tanda (√) pada kotak pilihan yang sudah tersedia.

Keterangan :

1 STS Sangat Tidak Setuju

2 TS Tidak Setuju

3 S Setuju

4 SS Sangat Setuju

No.	Pernyataan	Keterangan			
		STS	TS	S	SS
1	Beauty Inc memiliki peralatan yang up to date.				
2	Beauty Inc memiliki fasilitas fisik yang menarik secara visual.				
3	Karyawan Beauty Inc berpakaian baik dan rapi.				
4	Beauty Inc selalu menepati janjinya.				
5	Beauty Inc dapat diandalkan saat melayani saya.				
6	Beauty Inc menyimpan data dengan akurat.				
7	Saya merasa tidak menerima layanan yang cepat dari karyawan Beauty Inc.				
8	Karyawan Beauty Inc tidak selalu bersedia untuk membantu saya.				
9	Saya merasa karyawan Beauty Inc terlalu sibuk untuk menanggapi permintaan saya.				
10	Sebagai pelanggan Beauty Inc saya mempercayai karayawan Beauty Inc.				
11	Saya merasa karyawan Beauty Inc sopan.				
12	Saya merasa karyawan Beauty Inc mendapatkan dukungan dari perusahaan agar dapat melaksanakan tugasmya dengan baik.				

No	Pernyataan	Keterangan			
		STS	TS	S	SS
13	Saya merasa karyawan Beauty Inc tidak memberikan perhatian secara individu.				
14	Saya merasa karyawan Beauty Inc tidak memberikan perhatian secara pribadi.				
15	Saya merasa karyawan Beauty Inc tidak tahu kebutuhan saya.				
16	Beauty Inc tidak memiliki kepentingan yang terbaik dihati pelanggan.				
17	Saya merasa karyawan Beauty Inc memiliki pengetahuan tentang perawatan yang dilakukan.				
18	Saya merasa sangat yakin tentang keterampilan yang dimiliki karyawan.				
19	Saya merasa karyawan Beauty Inc berkualitas baik.				
20	Saya merasa karyawan Beauty Inc perhatian tentang kemauan saya.				
21	Saya merasa kebutuhan dan keinginan saya sangat penting bagi karyawan Beauty Inc.				
22	Saya merasa karyawan Beauty Inc akan membantu saya jika menghadapi masalah.				
23	Saya merasa karyawan Beauty Inc bersikap adil kepada saya dan pelanggan yang lain.				
24	Saya merasa karyawan Beauty Inc memiliki perilaku yang sangat baik.				
25	Saya merasa karyawan Beauty Inc mengutamakan kepentingan saya.				
26	Saya pikir saya melakukan hal yang benar ketika saya Memilih Beauty Inc.				
27	Secara keseluruhan, saya senang dengan layanan yang diberikan Beauty Inc.				
28	Harapan saya sesuai dengan apa yang saya rasakan di Beauty Inc.				
29	Saya akan kembali melakukan perawatan ke Beauty Inc.				
30	Saya akan membeli produk lain yang ditawarkan Beauty Inc.				
31	Saya akan merekomendasikan Beauty Inc kepada orang lain				
32	Saya akan selalu mengatakan hal positif kepada orang lain				

LAMPIRAN II

HASIL UJI *PRE – TEST*

No. Responden	Kualitas Pelayanan																					
	P1	P2	P3	P4	P5	P6	P7	P8	P9	P10	P11	P12	P13	P14	P15	P16	P17	P18	P19	P20	P21	P22
R1	3	4	3	4	4	3	3	3	3	4	2	2	2	3	4	4	4	2	2	2	2	2
R2	4	3	4	3	4	4	4	4	3	3	2	2	2	3	4	3	3	2	2	2	2	2
R3	3	3	3	3	3	3	3	3	3	3	2	2	3	3	4	3	3	1	1	2	2	2
R4	3	4	3	4	4	3	4	3	4	4	3	2	2	2	4	3	4	2	2	2	3	1
R5	3	3	3	3	3	3	3	3	3	3	2	3	2	3	3	3	3	2	3	2	3	1
R6	4	4	4	4	4	3	3	4	3	3	1	2	2	3	3	3	3	2	2	2	2	2
R7	3	3	3	3	3	3	3	3	3	3	2	2	2	4	3	4	3	2	2	2	2	2
R8	3	3	4	3	4	3	3	4	3	3	1	2	2	3	3	3	3	2	3	3	2	2
R9	3	3	3	4	3	4	3	4	3	4	2	2	2	4	3	4	3	2	2	2	3	2
R10	4	4	4	3	3	3	3	3	3	3	2	2	2	3	3	3	3	2	2	3	2	2
R11	3	3	3	3	3	3	3	3	4	4	2	2	1	4	3	4	3	1	1	1	2	2
R12	3	3	3	4	4	3	4	3	4	3	1	1	1	3	3	3	3	2	3	1	2	2
R13	4	3	4	3	4	3	3	3	4	3	2	2	2	3	3	3	3	3	2	3	2	2
R14	3	3	3	3	3	3	3	3	3	3	2	2	2	3	3	3	4	3	2	2	2	2
R15	3	4	3	4	3	3	4	4	3	4	2	1	2	4	3	4	3	2	3	3	2	1
R16	4	3	4	3	3	4	3	3	3	3	1	2	2	3	3	3	3	3	3	2	2	2
R17	3	3	3	3	3	4	3	3	3	3	2	2	2	3	4	3	3	3	2	2	2	2
R18	4	4	4	3	3	4	3	4	3	3	3	2	2	3	3	4	3	2	2	3	2	2
R19	3	3	3	3	3	3	3	3	3	3	2	2	3	3	3	3	3	2	2	2	2	2
R20	3	3	3	3	3	3	4	3	3	4	3	2	2	3	3	4	3	2	2	2	3	2
R21	4	3	4	3	3	4	3	3	2	3	2	2	3	3	3	3	3	1	1	1	2	2
R22	3	3	3	3	4	4	4	3	3	4	3	3	2	4	4	4	4	2	3	3	3	1
R23	3	3	3	3	3	3	3	3	3	3	2	2	2	3	3	3	3	3	2	2	2	2
R24	4	4	4	4	3	3	3	3	3	4	3	3	3	3	3	3	3	4	3	3	4	1
R25	3	3	3	3	4	4	4	4	4	3	2	2	2	4	4	4	4	3	2	3	3	1
R26	4	3	4	3	4	4	4	4	3	3	2	2	2	3	3	3	3	3	3	2	3	2

No. Responden	Kualitas Pelayanan																					
	P1	P2	P3	P4	P5	P6	P7	P8	P9	P10	P11	P12	P13	P14	P15	P16	P17	P18	P19	P20	P21	P22
R27	3	3	3	3	3	4	3	4	3	3	2	2	2	4	3	4	4	1	1	1	2	1
R28	3	3	4	3	3	3	3	3	3	3	3	3	3	3	3	3	3	4	1	3	2	2
R29	3	3	3	3	3	3	3	3	3	4	2	2	2	3	3	3	3	2	2	2	2	2
R30	4	3	4	3	4	3	4	3	3	4	2	2	2	4	4	3	4	2	2	2	2	2

No. Responden	Kepercayaan											Kepuasan Pelanggan			Loyalitas Pelanggan				
	P23	P24	P25	P26	P27	P28	P29	P30	P31	P32	P33	P34	P35	P36	P37	P38	P39	P40	P41
R1	3	3	3	3	3	3	3	3	3	3	3	3	3	3	3	2	3	3	4
R2	3	3	3	4	3	3	3	4	3	3	3	4	4	4	3	2	3	3	3
R3	3	3	3	3	3	2	3	3	3	3	3	3	3	3	3	3	3	3	3
R4	3	3	3	3	3	3	3	3	3	3	2	4	4	4	3	3	3	3	2
R5	3	3	3	3	3	3	3	3	2	3	3	3	3	3	3	3	3	3	2
R6	3	3	3	3	3	4	3	3	3	3	4	4	4	4	4	4	4	4	2
R7	3	3	3	3	3	3	3	3	3	3	3	3	3	3	3	3	3	3	2
R8	3	3	3	3	3	3	3	3	3	3	3	3	3	3	3	3	3	3	1
R9	3	3	3	3	3	3	3	3	3	3	3	3	3	3	4	3	3	3	2
R10	3	3	3	3	3	3	3	3	3	3	3	3	3	3	3	3	3	3	2
R11	3	3	3	3	3	3	3	4	3	4	4	4	4	3	3	3	4	4	3
R12	3	3	3	3	3	3	3	3	3	4	4	4	4	4	3	3	3	3	3
R13	3	3	3	3	3	3	3	3	3	3	3	3	3	3	4	3	4	4	2
R14	3	3	3	3	3	3	3	3	3	3	3	3	3	3	3	3	3	3	2
R15	3	3	3	3	4	4	3	4	3	3	4	4	4	3	3	3	4	4	3
R16	3	3	3	3	4	3	3	4	4	4	3	3	3	3	3	3	4	3	3
R17	3	3	3	3	3	3	3	3	3	3	3	3	4	3	3	4	4	3	3
R18	3	3	3	2	3	2	3	3	3	2	3	3	3	3	3	3	1	3	3
R19	3	3	3	3	3	3	3	3	3	3	2	3	3	4	3	2	3	3	3
R20	3	3	3	3	3	3	3	3	3	3	3	3	3	3	3	2	3	3	2
R21	3	4	3	3	3	3	3	3	4	3	3	3	3	3	3	3	3	1	2
R22	3	3	4	4	4	3	3	3	3	3	3	4	4	4	4	3	3	3	3
R23	3	2	2	2	2	3	3	3	3	3	3	3	4	3	3	3	3	4	2

No. Responden	Kepercayaan												Kepuasan Pelanggan			Loyalitas Pelanggan			
	P23	P24	P25	P26	P27	P28	P29	P30	P31	P32	P33	P34	P35	P36	P37	P38	P39	P40	P41
R24	4	3	3	3	3	2	3	3	4	3	3	3	3	3	4	4	3	3	3
R25	3	3	3	3	4	3	3	3	3	3	4	4	4	3	3	3	4	4	3
R26	3	3	3	3	3	3	2	3	2	2	3	3	3	3	3	3	3	3	3
R27	3	3	3	2	2	3	3	3	3	3	3	3	3	3	4	3	3	3	3
R28	3	3	3	3	3	3	2	3	3	3	3	3	3	3	4	3	4	4	2
R29	3	3	3	3	3	3	3	3	3	3	3	3	3	3	3	3	3	3	2
R30	3	3	3	3	3	3	3	3	3	3	3	3	3	3	4	3	4	3	2

KUALITAS PELAYANAN

KMO and Bartlett's Test

Kaiser-Meyer-Olkin Measure of Sampling Adequacy.		.511
Bartlett's Test of Sphericity	Approx. Chi-Square	56.175
	Df	6
	Sig.	.000

Anti-image Matrices

		Tang1	Tang2	Tang3	Tang4
Anti-image Covariance	Tang1	.236	-.071	-.203	.020
	Tang2	-.071	.508	-.004	-.349
	Tang3	-.203	-.004	.243	.046
	Tang4	.020	-.349	.046	.540
Anti-image Correlation	Tang1	.521[a]	-.206	-.847	.055
	Tang2	-.206	.511[a]	-.010	-.666
	Tang3	-.847	-.010	.523[a]	.127
	Tang4	.055	-.666	.127	.472[a]

a. Measures of Sampling Adequacy(MSA)

Component Matrix[a]

	Component	
	1	2
Tang1	.926	-.269
Tang2	.549	.740
Tang3	.894	-.358
Tang4	.179	.910

Extraction Method: Principal Component Analysis.

a. 2 components extracted.

KMO and Bartlett's Test

Kaiser-Meyer-Olkin Measure of Sampling Adequacy.		.518
Bartlett's Test of Sphericity	Approx. Chi-Square	40.132
	Df	3
	Sig.	.000

Anti-image Matrices

		Tang1	Tang2	Tang3
Anti-image Covariance	Tang1	.237	-.106	-.209
	Tang2	-.106	.913	.048
	Tang3	-.209	.048	.247
Anti-image Correlation	Tang1	.510[a]	-.227	-.862
	Tang2	-.227	.651[a]	.101
	Tang3	-.862	.101	.511[a]

a. Measures of Sampling Adequacy(MSA)

Component Matrix[a]

	Component
	1
Tang1	.952
Tang2	.454
Tang3	.931

Extraction Method: Principal Component Analysis.
a. 1 components extracted.

Reliability Statistics

Cronbach's Alpha	N of Items
.720	3

KMO and Bartlett's Test

Kaiser-Meyer-Olkin Measure of Sampling Adequacy.		.596
Bartlett's Test of Sphericity	Approx. Chi-Square	26.375
	Df	10
	Sig.	.003

Anti-image Matrices

		Rea1	Rea2	Rea3	Rea4	Rea5
Anti-image Covariance	Rea1	.594	.037	-.291	-.145	-.204
	Rea2	.037	.724	-.112	-.318	.176
	Rea3	-.291	-.112	.657	-.010	-.106
	Rea4	-.145	-.318	-.010	.729	.032
	Rea5	-.204	.176	-.106	.032	.755
Anti-image Correlation	Rea1	.603[a]	.057	-.466	-.220	-.305
	Rea2	.057	.510[a]	-.163	-.438	.238
	Rea3	-.466	-.163	.640[a]	-.014	-.150
	Rea4	-.220	-.438	-.014	.572[a]	.042
	Rea5	-.305	.238	-.150	.042	.643[a]

a. Measures of Sampling Adequacy(MSA)

Component Matrix[a]

	Component	
	1	2
Rea1	.835	-.205
Rea2	.297	.810
Rea3	.803	-.095
Rea4	.516	.641
Rea5	.522	-.621

Extraction Method: Principal Component Analysis.

a. 2 components extracted.

KMO and Bartlett's Test

Kaiser-Meyer-Olkin Measure of Sampling Adequacy.		.619
Bartlett's Test of Sphericity	Approx. Chi-Square	18.025
	Df	6
	Sig.	.006

Anti-image Matrices

		Rea1	Rea3	Rea4	Rea5
Anti-image Covariance	Rea1	.595	-.294	-.159	-.226
	Rea3	-.294	.675	-.075	-.086
	Rea4	-.159	-.075	.902	.142
	Rea5	-.226	-.086	.142	.800
Anti-image Correlation	Rea1	.597[a]	-.463	-.217	-.328
	Rea3	-.463	.654[a]	-.097	-.117
	Rea4	-.217	-.097	.564[a]	.168
	Rea5	-.328	-.117	.168	.639[a]

a. Measures of Sampling Adequacy(MSA)

Component Matrix[a]

	Component	
	1	2
Rea1	.862	.003
Rea3	.805	.031
Rea4	.391	.841
Rea5	.627	-.568

Extraction Method: Principal Component Analysis.

a. 2 components extracted.

KMO and Bartlett's Test

Kaiser-Meyer-Olkin Measure of Sampling Adequacy.		.621
Bartlett's Test of Sphericity	Approx. Chi-Square	15.456
	Df	3
	Sig.	.001

Anti-image Matrices

		Rea1	Rea3	Rea5
Anti-image Covariance	Rea1	.625	-.325	-.217
	Rea3	-.325	.681	-.077
	Rea5	-.217	-.077	.823
Anti-image Correlation	Rea1	.585[a]	-.498	-.303
	Rea3	-.498	.611[a]	-.102
	Rea5	-.303	-.102	.720[a]

a. Measures of Sampling Adequacy(MSA)

Component Matrix[a]

	Component
	1
Rea1	.854
Rea3	.804
Rea5	.695

Extraction Method: Principal Component Analysis.
a. 1 components extracted.

Reliability Statistics

Cronbach's Alpha	N of Items
.693	3

KMO and Bartlett's Test

Kaiser-Meyer-Olkin Measure of Sampling Adequacy.		.550
Bartlett's Test of Sphericity	Approx. Chi-Square	20.253
	Df	6
	Sig.	.002

Anti-image Matrices

		Res1	Res2	Res3	Res4
Anti-image Covariance	Res1	.779	-.309	.104	.122
	Res2	-.309	.572	-.276	-.130
	Res3	.104	-.276	.657	-.201
	Res4	.122	-.130	-.201	.794
Anti-image Correlation	Res1	.402[a]	-.463	.145	.156
	Res2	-.463	.538[a]	-.450	-.193
	Res3	.145	-.450	.590[a]	-.278
	Res4	.156	-.193	-.278	.664[a]

a. Measures of Sampling Adequacy(MSA)

Component Matrix[a]

	Component	
	1	2
Res1	.398	.845
Res2	.848	.262
Res3	.789	-.282
Res4	.637	-.526

Extraction Method: Principal Component Analysis.

a. 2 components extracted.

KMO and Bartlett's Test

Kaiser-Meyer-Olkin Measure of Sampling Adequacy.		.635
Bartlett's Test of Sphericity	Approx. Chi-Square	13.723
	Df	3
	Sig.	.003

Anti-image Matrices

		Res2	Res3	Res4
Anti-image Covariance	Res2	.727	-.305	-.106
	Res3	-.305	.672	-.227
	Res4	-.106	-.227	.814
Anti-image Correlation	Res2	.632[a]	-.436	-.138
	Res3	-.436	.601[a]	-.308
	Res4	-.138	-.308	.705[a]

a. Measures of Sampling Adequacy(MSA)

Component Matrix[a]

	Component
	1
Res2	.786
Res3	.837
Res4	.717

Extraction Method: Principal Component Analysis.
a. 1 components extracted.

Reliability Statistics

Cronbach's Alpha	N of Items
.669	3

KMO and Bartlett's Test

Kaiser-Meyer-Olkin Measure of Sampling Adequacy.		.531
Bartlett's Test of Sphericity	Approx. Chi-Square	28.502
	Df	6
	Sig.	.000

Anti-image Matrices

		Ass1	Ass2	Ass3	Ass4
Anti-image Covariance	Ass1	.554	.034	-.349	-.040
	Ass2	.034	.675	.038	-.369
	Ass3	-.349	.038	.536	-.108
	Ass4	-.040	-.369	-.108	.623
Anti-image Correlation	Ass1	.541[a]	.055	-.640	-.068
	Ass2	.055	.488[a]	.063	-.568
	Ass3	-.640	.063	.539[a]	-.187
	Ass4	-.068	-.568	-.187	.546[a]

a. Measures of Sampling Adequacy(MSA)

Component Matrix[a]

	Component	
	1	2
Ass1	.746	-.521
Ass2	.494	.759
Ass3	.783	-.464
Ass4	.712	.529

Extraction Method: Principal Component Analysis.

a. 2 components extracted.

KMO and Bartlett's Test

Kaiser-Meyer-Olkin Measure of Sampling Adequacy.		.557
Bartlett's Test of Sphericity	Approx. Chi-Square	18.168
	Df	3
	Sig.	.000

Anti-image Matrices

		Ass1	Ass3	Ass4
Anti-image Covariance	Ass1	.555	-.353	-.032
	Ass3	-.353	.538	-.129
	Ass4	-.032	-.129	.921
Anti-image Correlation	Ass1	.539[a]	-.646	-.044
	Ass3	-.646	.536[a]	-.184
	Ass4	-.044	-.184	.777[a]

a. Measures of Sampling Adequacy(MSA)

Component Matrix[a]

	Component
	1
Ass1	.864
Ass3	.886
Ass4	.532

Extraction Method: Principal Component Analysis.
a. 1 components extracted.

Reliability Statistics

Cronbach's Alpha	N of Items
.664	3

KMO and Bartlett's Test

Kaiser-Meyer-Olkin Measure of Sampling Adequacy.		.595
Bartlett's Test of Sphericity	Approx. Chi-Square	33.648
	Df	10
	Sig.	.000

Anti-image Matrices

		Emp1	Emp2	Emp3	Emp4	Emp5
Anti-image Covariance	Emp1	.600	-.103	-.306	-.176	-.177
	Emp2	-.103	.748	-.121	-.133	.050
	Emp3	-.306	-.121	.643	.063	.137
	Emp4	-.176	-.133	.063	.539	.324
	Emp5	-.177	.050	.137	.324	.593
Anti-image Correlation	Emp1	.538[a]	-.154	-.493	-.309	-.297
	Emp2	-.154	.827[a]	-.175	-.210	.076
	Emp3	-.493	-.175	.616[a]	.106	.221
	Emp4	-.309	-.210	.106	.583[a]	.573
	Emp5	-.297	.076	.221	.573	.501[a]

a. Measures of Sampling Adequacy(MSA)

Component Matrix[a]

	Component	
	1	2
Emp1	.660	.577
Emp2	.707	.057
Emp3	.692	.444
Emp4	.756	-.427
Emp5	-.606	.670

Extraction Method: Principal Component Analysis.

a. 2 components extracted.

KMO and Bartlett's Test

Kaiser-Meyer-Olkin Measure of Sampling Adequacy.		.689
Bartlett's Test of Sphericity	Approx. Chi-Square	20.062
	Df	6
	Sig.	.003

Anti-image Matrices

		Emp1	Emp2	Emp3	Emp4
Anti-image Covariance	Emp1	.658	-.097	-.306	-.129
	Emp2	-.097	.752	-.141	-.240
	Emp3	-.306	-.141	.676	-.019
	Emp4	-.129	-.240	-.019	.802
Anti-image Correlation	Emp1	.668[a]	-.138	-.458	-.178
	Emp2	-.138	.731[a]	-.197	-.309
	Emp3	-.458	-.197	.659[a]	-.025
	Emp4	-.178	-.309	-.025	.719[a]

a. Measures of Sampling Adequacy(MSA)

Component Matrix[a]

	Component
	1
Emp1	.780
Emp2	.723
Emp3	.753
Emp4	.651

Extraction Method: Principal Component Analysis.

a. 1 components extracted.

Reliability Statistics

Cronbach's Alpha	N of Items
.702	4

KEPERCAYAAN

KMO and Bartlett's Test

Kaiser-Meyer-Olkin Measure of Sampling Adequacy.		.600
Bartlett's Test of Sphericity	Approx. Chi-Square	21.557
	Df	6
	Sig.	.001

Anti-image Matrices

		Abili1	Abili2	Abili3	Abili4
Anti-image Covariance	Abili1	1.000	.000	.008	-.015
	Abili2	.000	.750	-.249	.000
	Abili3	.008	-.249	.498	-.316
	Abili4	-.015	.000	-.316	.597
Anti-image Correlation	Abili1	.309[a]	.000	.011	-.020
	Abili2	.000	.679[a]	-.407	.000
	Abili3	.011	-.407	.565[a]	-.580
	Abili4	-.020	.000	-.580	.600[a]

a. Measures of Sampling Adequacy(MSA)

Component Matrix[a]

	Component	
	1	2
Abili1	.013	1.000
Abili2	.720	-.024
Abili3	.894	-.012
Abili4	.813	.019

Extraction Method: Principal Component Analysis.

a. 2 components extracted.

KMO and Bartlett's Test

Kaiser-Meyer-Olkin Measure of Sampling Adequacy.		.600
Bartlett's Test of Sphericity	Approx. Chi-Square	21.815
	Df	3
	Sig.	.000

Anti-image Matrices

		Abili2	Abili3	Abili4
Anti-image Covariance	Abili2	.750	-.249	.000
	Abili3	-.249	.498	-.316
	Abili4	.000	-.316	.597
Anti-image Correlation	Abili2	.679[a]	-.407	.000
	Abili3	-.407	.565[a]	-.580
	Abili4	.000	-.580	.600[a]

a. Measures of Sampling Adequacy(MSA)

Component Matrix[a]

	Component
	1
Abili2	.720
Abili3	.894
Abili4	.813

Extraction Method: Principal Component Analysis.
a. 1 components extracted.

Reliability Statistics

Cronbach's Alpha	N of Items
.707	3

KMO and Bartlett's Test

Kaiser-Meyer-Olkin Measure of Sampling Adequacy.		.570
Bartlett's Test of Sphericity	Approx. Chi-Square	11.404
	Df	3
	Sig.	.010

Anti-image Matrices

		Bene1	Bene2	Bene3
Anti-image Covariance	Bene1	.693	-.103	-.359
	Bene2	-.103	.933	-.102
	Bene3	-.359	-.102	.693
Anti-image Correlation	Bene1	.549[a]	-.128	-.518
	Bene2	-.128	.762[a]	-.127
	Bene3	-.518	-.127	.549[a]

a. Measures of Sampling Adequacy(MSA)

Component Matrix[a]

	Component
	1
Bene1	.835
Bene2	.549
Bene3	.834

Extraction Method: Principal Component Analysis.
a. 1 components extracted.

Reliability Statistics

Cronbach's Alpha	N of Items
.604	3

KMO and Bartlett's Test

Kaiser-Meyer-Olkin Measure of Sampling Adequacy.		.604
Bartlett's Test of Sphericity	Approx. Chi-Square	15.984
	Df	6
	Sig.	.014

Anti-image Matrices

		Inte1	Inte2	Inte3	Inte4
Anti-image Covariance	Inte1	.755	-.061	-.228	-.179
	Inte2	-.061	.814	-.274	.150
	Inte3	-.228	-.274	.653	-.193
	Inte4	-.179	.150	-.193	.821
Anti-image Correlation	Inte1	.686[a]	-.078	-.324	-.228
	Inte2	-.078	.526[a]	-.376	.183
	Inte3	-.324	-.376	.597[a]	-.264
	Inte4	-.228	.183	-.264	.586[a]

a. Measures of Sampling Adequacy(MSA)

Component Matrix[a]

	Component	
	1	2
Inte1	.760	-.163
Inte2	.536	.747
Inte3	.833	.128
Inte4	.579	-.661

Extraction Method:
Principal Component
Analysis.
a. 2 components extracted.

KMO and Bartlett's Test

Kaiser-Meyer-Olkin Measure of Sampling Adequacy.		.638
Bartlett's Test of Sphericity	Approx. Chi-Square	10.585
	Df	3
	Sig.	.014

Anti-image Matrices

		Inte1	Inte3	Inte4
Anti-image Covariance	Inte1	.760	-.291	-.175
	Inte3	-.291	.761	-.172
	Inte4	-.175	-.172	.849
Anti-image Correlation	Inte1	.617[a]	-.382	-.218
	Inte3	-.382	.618[a]	-.214
	Inte4	-.218	-.214	.701[a]

a. Measures of Sampling Adequacy(MSA)

Component Matrix[a]

	Component
	1
Inte1	.791
Inte3	.790
Inte4	.703

Extraction Method: Principal Component Analysis.
a. 1 components extracted.

Reliability Statistics

Cronbach's Alpha	N of Items
.622	3

KEPUASAN PELANGGAN

KMO and Bartlett's Test

Kaiser-Meyer-Olkin Measure of Sampling Adequacy.		.638
Bartlett's Test of Sphericity	Approx. Chi-Square	49.698
	Df	3
	Sig.	.000

Anti-image Matrices

		Satis1	Satis2	Satis3
Anti-image Covariance	Satis1	.223	-.194	-.154
	Satis2	-.194	.272	.016
	Satis3	-.154	.016	.589
Anti-image Correlation	Satis1	.586[a]	-.788	-.426
	Satis2	-.788	.618[a]	.040
	Satis3	-.426	.040	.791[a]

a. Measures of Sampling Adequacy(MSA)

Component Matrix[a]

	Component
	1
Satis1	.947
Satis2	.907
Satis3	.800

Extraction Method: Principal Component Analysis.
a. 1 components extracted.

Reliability Statistics

Cronbach's Alpha	N of Items
.863	3

LOYALITAS PELANGGAN

KMO and Bartlett's Test

Kaiser-Meyer-Olkin Measure of Sampling Adequacy.		.625
Bartlett's Test of Sphericity	Approx. Chi-Square	13.680
	Df	10
	Sig.	.188

Anti-image Matrices

		Loyal1	Loyal2	Loyal3	Loyal4	Loyal5
Anti-image Covariance	Loyal1	.827	-.244	-.098	-.094	.070
	Loyal2	-.244	.832	-.124	-.005	.120
	Loyal3	-.098	-.124	.749	-.316	.022
	Loyal4	-.094	-.005	-.316	.781	-.076
	Loyal5	.070	.120	.022	-.076	.960
Anti-image Correlation	Loyal1	.678[a]	-.294	-.124	-.116	.078
	Loyal2	-.294	.646[a]	-.157	-.006	.134
	Loyal3	-.124	-.157	.613[a]	-.413	.026
	Loyal4	-.116	-.006	-.413	.584[a]	-.088
	Loyal5	.078	.134	.026	-.088	.591[a]

a. Measures of Sampling Adequacy(MSA)

Component Matrix[a]

	Component	
	1	2
Loyal1	.676	-.233
Loyal2	.637	-.391
Loyal3	.735	.319
Loyal4	.642	.525
Loyal5	-.222	.745

Extraction Method: Principal Component Analysis.
a. 2 components extracted.

KMO and Bartlett's Test

Kaiser-Meyer-Olkin Measure of Sampling Adequacy.		.621
Bartlett's Test of Sphericity	Approx. Chi-Square	12.753
	Df	6
	Sig.	.047

Anti-image Matrices

		Loyal1	Loyal2	Loyal3	Loyal4
Anti-image Covariance	Loyal1	.832	-.259	-.100	-.089
	Loyal2	-.259	.847	-.129	.005
	Loyal3	-.100	-.129	.749	-.317
	Loyal4	-.089	.005	-.317	.787
Anti-image Correlation	Loyal1	.661[a]	-.308	-.127	-.110
	Loyal2	-.308	.632[a]	-.162	.006
	Loyal3	-.127	-.162	.611[a]	-.413
	Loyal4	-.110	.006	-.413	.595[a]

a. Measures of Sampling Adequacy(MSA)

Component Matrix[a]

	Component
	1
Loyal1	.666
Loyal2	.616
Loyal3	.751
Loyal4	.674

Extraction Method: Principal Component Analysis.
a. 1 components extracted.

Reliability Statistics

Cronbach's Alpha	N of Items
.606	4

LAMPIRAN III

OLAHAN KARAKTERISTIK RESPONDEN

No. responden	Usia	Pendidikan Terakhir	Pekerjaan	Pengeluaran Perbulan	Berapa kali datang ke beauty Inc	Pernah pindah klinik kecantikan lainnya
R1	3	1	5	2	1	1
R2	3	2	3	3	2	1
R3	3	2	5	3	2	2
R4	2	1	4	1	1	2
R5	3	2	4	2	2	2
R6	4	2	5	3	2	2
R7	3	2	4	2	2	2
R8	2	1	5	2	2	2
R9	3	1	5	2	2	2
R10	3	2	5	3	2	2
R11	3	1	4	1	1	2
R12	3	1	3	1	1	2
R13	2	1	4	2	2	2
R14	4	1	5	3	2	2
R15	4	1	5	3	1	2
R16	4	1	5	3	2	2
R17	4	1	4	3	2	2
R18	4	1	5	3	2	2
R19	3	2	3	2	2	2
R20	3	1	4	2	2	2
R21	3	2	5	3	2	2
R22	2	1	4	1	1	2
R23	3	1	5	2	2	2
R24	3	1	5	3	2	2
R25	4	2	5	3	1	2
R26	3	1	4	2	2	2
R27	3	2	4	3	2	2
R28	3	1	4	1	2	2
R29	4	1	5	3	2	2
R30	2	1	4	1	1	2
R31	3	1	4	2	1	2
R32	4	2	5	3	2	2
R33	2	2	4	2	1	2
R34	3	1	4	2	1	2

No. responden	Usia	Pendidikan Terakhir	Pekerjaan	Pengeluaran Perbulan	Berapa kali datang ke beauty inc	Pernah pindah ke klinik kecantikan lainnya
R35	3	2	5	2	2	2
R36	3	2	4	1	2	2
R37	4	1	5	2	1	2
R38	2	1	4	1	1	2
R39	4	1	5	2	1	2
R40	4	1	3	4	2	2
R41	4	1	5	3	2	2
R42	4	1	3	2	2	2
R43	4	1	5	2	1	2
R44	3	2	5	2	2	2
R45	3	1	5	2	1	2
R46	3	2	5	2	2	2
R47	3	1	4	1	1	1
R48	2	2	4	1	1	2
R49	4	1	5	3	2	2
R50	4	1	5	3	2	2
R51	3	2	3	3	1	2
R52	4	1	5	2	2	2
R53	3	1	4	1	1	2
R54	4	1	5	2	2	2
R55	3	2	4	2	2	2
R56	2	1	5	2	1	2
R57	3	1	5	2	2	2
R58	3	1	5	2	1	2
R59	4	2	5	2	2	2
R60	4	2	5	2	2	2
R61	3	2	3	2	2	2
R62	3	1	5	2	2	2
R63	4	2	5	2	2	2
R64	3	1	5	1	1	2
R65	4	1	5	3	2	2
R66	3	1	5	2	1	2
R67	4	2	5	2	1	2
R68	3	2	3	2	1	2

No. responden	Usia	Pendidikan Terakhir	Pekerjaan	Pengeluaran Perbulan	Berapa kali datang ke beauty inc	Pernah pindah klinik kecantikan lainnya
R69	4	1	5	2	2	2
R70	3	1	4	2	1	2
R71	3	1	5	2	1	1
R72	3	2	4	2	1	2
R73	4	1	5	3	2	2
R74	3	1	4	2	2	2
R75	3	2	4	3	1	2
R76	4	1	5	3	2	2
R77	3	2	5	2	2	2
R78	2	1	5	3	1	2
R79	3	2	4	2	1	1
R80	3	2	5	2	1	1
R81	3	2	5	2	2	2
R82	4	2	5	3	2	2
R83	3	1	3	2	1	2
R84	3	1	5	2	2	2
R85	3	1	5	2	1	1
R86	3	1	4	2	2	2
R87	3	1	5	1	2	2
R88	4	2	5	2	2	2
R89	4	1	5	2	2	2
R90	2	1	3	2	2	2
R91	4	2	5	3	1	2
R92	3	1	4	2	2	2
R93	4	2	5	3	2	2
R94	2	2	4	3	1	2
R95	4	1	5	3	2	2
R96	4	1	5	2	1	2
R97	3	2	5	2	2	2
R98	3	2	5	2	1	2
R99	3	2	4	2	2	2
R100	2	2	4	1	1	1
R101	4	2	5	2	1	1
R102	2	1	4	2	1	2

No. responden	Usia	Pendidikan Terakhir	Pekerjaan	Pengeluaran Perbulan	Berapa kali datang ke beauty inc	Pernah pindah klinik kecantikan lainnya
R103	3	1	5	2	1	2
R104	3	1	5	2	1	1
R105	3	2	4	1	2	2
R106	4	2	4	2	2	2
R107	4	1	5	2	2	2
R108	4	1	5	2	1	2
R109	3	1	5	2	2	2
R110	3	1	3	2	2	2
R111	4	2	5	3	2	2
R112	2	1	4	1	2	2
R113	3	1	4	1	2	2
R114	3	1	4	1	2	1
R115	4	1	5	2	2	2
R116	3	1	5	3	2	2
R117	2	1	4	2	1	2
R118	4	2	5	2	2	2
R119	3	2	5	2	2	2
R120	4	1	5	2	2	2
R121	2	1	4	1	2	1
R122	3	1	3	1	2	1
R123	4	1	5	2	2	1
R124	3	1	5	1	1	2
R125	4	1	4	2	2	2
R126	4	1	4	1	1	2
R127	4	2	5	2	1	2
R128	3	2	5	2	2	2
R129	4	2	5	2	2	2
R130	4	2	5	2	2	1
R131	3	1	4	2	2	2
R132	4	1	4	2	1	2
R133	3	2	4	2	1	2
R134	4	2	4	3	2	2
R135	3	2	5	2	1	2
R136	3	2	4	2	2	2

No. responden	Usia	Pendidikan Terakhir	Pekerjaan	Pengeluaran Perbulan	Berapa kali datang ke beauty inc	Pernah pindah klinik kecantikan lainnya
R137	3	1	4	1	2	2
R138	3	1	4	2	1	2
R139	4	1	5	2	2	2
R140	4	1	5	2	1	1
R141	4	1	5	2	1	1
R142	4	1	5	2	2	2
R143	3	1	3	2	1	2
R144	4	1	4	2	2	2
R145	3	2	4	2	2	2
R146	2	1	4	1	2	2
R147	3	1	4	2	1	2
R148	3	2	5	2	2	2
R149	4	1	5	2	1	1
R150	3	2	3	1	2	2
R151	4	2	4	1	2	1
R152	3	2	5	2	2	2
R153	4	2	4	1	1	1
R154	3	1	4	2	1	2
R155	3	1	5	2	2	2
R156	3	1	5	2	2	2
R157	3	1	5	2	2	1
R158	3	1	5	2	1	1
R159	4	2	5	2	1	1
R160	4	2	5	2	2	2
R161	3	1	5	2	1	2
R162	4	2	5	2	1	2
R163	3	2	3	2	1	2
R164	4	1	5	2	2	2
R165	3	1	4	2	1	2
R166	3	1	5	2	1	1
R167	3	2	4	2	1	2
R168	4	1	5	3	2	2
R169	3	1	4	2	2	2
R170	3	2	4	3	1	2
R171	4	1	5	3	2	2

No. responden	Usia	Pendidikan Terakhir	Pekerjaan	Pengeluaran Perbulan	Berapa kali datang ke beauty inc	Pernah pindah klinik kecantikan lainnya
R172	3	2	5	2	2	2
R173	2	1	5	3	1	2
R174	3	2	4	2	1	1
R175	3	2	5	2	1	1
R176	3	2	5	2	2	2
R177	4	2	5	3	2	2
R178	3	1	3	2	1	2
R179	3	1	5	2	2	2
R180	3	1	5	2	1	1
R181	3	1	4	2	2	2
R182	3	1	5	1	2	2
R183	4	2	5	2	2	2
R184	4	1	5	2	2	2
R185	2	1	3	2	2	2
R186	4	2	5	3	1	2
R187	3	1	4	2	2	2
R188	4	2	5	3	2	2
R189	2	2	4	3	1	2
R190	4	1	5	3	2	2
R191	4	1	5	2	1	2
R192	3	2	5	2	2	2
R193	3	2	5	2	1	2
R194	3	2	4	2	2	2
R195	2	2	4	1	1	1
R196	4	2	5	2	1	1
R197	2	1	4	2	1	2
R198	3	1	5	2	1	2
R199	3	1	5	2	1	1
R200	3	2	4	1	2	2
R201	4	2	4	2	2	2
R202	4	1	5	2	2	2
R203	4	1	5	2	1	2
R204	3	1	5	2	2	2
R205	3	1	3	2	2	2

Statistics

Usia

N	Valid	205
	Missing	0

Usia

		Frequency	Percent	Valid Percent	Cumulative Percent
Valid	23 - 28 tahun	23	11.2	11.2	11.2
	29 - 34 tahun	107	52.2	52.2	63.4
	> 35 tahun	75	36.6	36.6	100.0
	Total	205	100.0	100.0	

Statistics

Pendidikan Terakhir

N	Valid	205
	Missing	0

Pendidikan Terakhir

		Frequency	Percent	Valid Percent	Cumulative Percent
Valid	SMA Sederajat	123	60.0	60.0	60.0
	S1/S2/S3	82	40.0	40.0	100.0
	Total	205	100.0	100.0	

Statistics

Pekerjaan

N	Valid	205
	Missing	0

Pekerjaan

		Frequency	Percent	Valid Percent	Cumulative Percent
Valid	Wirausaha	18	8.8	8.8	8.8
	Karyawan Swasta	68	33.2	33.2	42.0
	Dan Lain-lain	119	58.0	58.0	100.0
	Total	205	100.0	100.0	

Statistics

Pengeluaran Perbulan

N	Valid	205
	Missing	0

Pengeluaran Perbulan

		Frequency	Percent	Valid Percent	Cumulative Percent
Valid	< Rp. 2.000.000	30	14.6	14.6	14.6
	Rp. 2.000.001 - Rp. 4. 000.000	133	64.9	64.9	79.5
	Rp. 4.000.001 - Rp. 6.000.000	41	20.0	20.0	99.5
	> Rp. 6.000.001	1	.5	.5	100.0
	Total	205	100.0	100.0	

Statistics

Berapa kali menggunakan jasa kecantikan Beauty Inc

N	Valid	205
	Missing	0

Berapa kali menggunakan jasa kecantikan Beauty Inc

		Frequency	Percent	Valid Percent	Cumulative Percent
Valid	5 - 9 kali kedatangan	84	41.0	41.0	41.0
	> 10 kali kedatangan	121	59.0	59.0	100.0
	Total	205	100.0	100.0	

Statistics

Pernah pindah ke klinik kecantikan lainnya

N	Valid	205
	Missing	0

Pernah pindah ke klinik kecantikan lainnya

		Frequency	Percent	Valid Percent	Cumulative Percent
Valid	Ya	30	14.6	14.6	14.6
	Tidak	175	85.4	85.4	100.0
	Total	205	100.0	100.0	

LAMPIRAN IV

ANALISIS FAKTOR

No. responden	Kualitas Pelayanan															
	P1	P2	P3	P4	P5	P6	P7	P8	P9	P10	P11	P12	P13	P14	P15	P16
R1	3	3	3	3	3	2	3	3	3	3	3	3	3	2	3	2
R2	3	3	4	4	4	4	2	4	1	3	4	4	2	2	1	1
R3	4	4	4	4	4	4	1	4	1	4	4	4	1	1	1	1
R4	3	3	4	3	3	3	3	3	3	3	3	3	3	3	3	3
R5	3	3	3	3	3	3	3	3	3	3	3	3	3	3	3	3
R6	3	3	4	3	3	3	3	4	4	4	3	3	3	4	4	2
R7	3	3	3	3	4	4	3	3	4	4	4	4	3	3	4	2
R8	3	3	3	3	3	3	3	4	3	3	3	3	3	3	3	3
R9	4	3	3	3	3	3	2	3	3	4	3	4	2	2	3	2
R10	3	3	3	3	3	3	3	3	3	3	2	3	3	3	3	2
R11	4	3	3	4	3	4	3	4	1	3	4	4	3	3	1	3
R12	3	3	3	3	3	3	2	3	3	3	3	3	2	3	3	3
R13	3	3	3	3	3	4	3	2	2	3	3	3	3	3	2	2
R14	3	4	4	3	3	3	3	4	3	3	4	4	3	3	3	3
R15	3	3	3	3	4	4	3	3	4	4	4	4	3	3	4	2
R16	4	4	4	3	3	3	3	3	3	3	3	3	3	3	3	3
R17	3	3	3	3	3	3	3	2	3	3	3	2	3	3	3	3
R18	3	4	4	4	4	3	3	3	3	3	4	4	3	3	3	3
R19	3	4	3	3	4	3	2	3	3	3	3	3	2	3	3	2
R20	3	3	4	3	4	3	3	1	2	3	4	2	3	1	2	2
R21	2	2	3	3	2	3	3	3	3	3	3	3	3	3	3	2
R22	3	3	3	3	3	3	3	3	3	3	3	3	3	3	3	3
R23	3	3	3	3	3	3	3	3	2	3	3	3	3	3	2	3
R24	3	3	3	3	3	3	3	3	3	3	3	3	3	3	3	3
R25	3	3	3	3	4	3	3	3	4	3	3	3	3	3	4	2
R26	3	3	3	3	4	3	3	2	4	3	3	3	3	3	4	2
R27	3	3	3	3	3	3	4	4	4	3	3	3	4	2	4	3
R28	3	3	3	3	3	3	3	3	3	3	3	3	3	3	3	2
R29	3	3	3	3	3	3	3	2	2	3	3	3	3	2	2	2
R30	3	3	3	3	3	3	3	3	3	3	3	3	3	2	3	3
R31	3	3	3	3	4	4	3	3	3	3	3	3	3	3	3	3
R32	3	3	3	4	4	3	3	3	3	3	3	3	3	3	3	3
R33	4	3	2	3	1	4	2	2	2	3	3	3	2	2	2	2
R34	3	3	3	3	4	3	2	2	3	3	3	3	2	2	3	2
R35	3	3	3	3	3	4	3	3	3	3	4	3	3	3	3	3
R36	3	2	3	3	3	3	3	3	3	4	3	3	3	3	3	3

No. responden	Kualitas Pelayanan															
	P1	P2	P3	P4	P5	P6	P7	P8	P9	P10	P11	P12	P13	P14	P15	P16
R37	3	3	3	3	3	3	3	3	3	3	3	3	3	2	3	2
R38	3	3	3	3	3	3	3	3	3	3	3	3	3	2	3	3
R39	4	3	4	3	4	4	4	3	3	3	4	3	4	3	3	1
R40	3	3	3	3	3	3	3	3	3	3	3	3	3	3	3	3
R41	3	3	4	3	3	3	3	3	3	3	3	3	3	3	3	3
R42	3	2	2	2	3	2	3	2	2	3	3	2	3	3	2	2
R43	3	3	3	3	3	3	3	3	3	3	3	3	3	3	3	3
R44	3	3	3	3	3	3	3	3	3	4	3	3	3	3	3	3
R45	3	3	4	3	3	4	3	2	2	3	4	4	3	2	2	2
R46	3	3	4	3	3	3	3	3	3	3	4	4	3	3	3	3
R47	4	4	4	4	4	4	4	4	4	4	4	4	4	3	4	3
R48	3	3	3	3	3	3	3	3	3	3	3	3	3	3	3	3
R49	3	3	3	3	3	3	2	2	2	3	3	3	2	2	2	2
R50	3	3	3	3	3	3	3	3	3	3	3	3	3	2	3	3
R51	4	3	3	3	3	2	3	4	3	3	3	3	3	3	3	3
R52	3	3	3	3	3	3	3	3	3	3	3	3	3	3	3	3
R53	3	3	3	3	3	2	3	3	2	3	3	3	3	3	2	2
R54	3	3	3	3	3	3	1	2	2	3	4	3	1	3	2	2
R55	3	3	3	3	3	3	3	3	2	3	3	3	3	3	2	3
R56	3	3	4	4	3	3	3	3	3	4	4	3	3	3	3	3
R57	3	3	3	3	3	3	2	2	2	3	3	3	2	3	2	2
R58	3	3	3	3	3	2	2	3	2	3	3	2	2	2	2	3
R59	3	3	3	3	3	3	3	3	3	3	3	3	3	3	3	3
R60	3	3	3	3	3	3	3	3	3	3	3	3	3	3	3	2
R61	3	3	4	3	3	3	3	1	2	4	3	4	3	1	2	2
R62	3	3	3	3	3	2	3	3	2	3	3	3	3	3	2	2
R63	3	3	3	3	3	3	3	3	3	3	3	3	3	3	3	2
R64	4	3	3	4	3	3	3	3	3	3	3	3	3	2	3	2
R65	3	3	4	4	3	3	3	3	4	4	4	4	3	4	4	3
R66	3	3	3	3	3	3	3	3	3	3	4	4	3	4	3	3
R67	4	3	4	3	3	3	3	3	3	3	4	3	3	3	3	3
R68	3	3	3	3	3	3	3	4	3	3	3	3	3	2	3	2
R69	4	4	4	3	3	3	3	4	4	4	3	3	3	2	4	4
R70	4	3	4	3	3	3	3	3	4	3	3	3	3	3	4	3
R71	3	3	4	4	3	3	4	3	4	4	3	3	4	2	4	2
R72	3	3	4	3	3	3	4	3	3	3	4	3	4	4	3	4

No. responden			Kualitas Pelayanan													
	P1	P2	P3	P4	P5	P6	P7	P8	P9	P10	P11	P12	P13	P14	P15	P16
R73	4	4	4	4	4	4	3	3	3	4	4	4	3	3	3	3
R74	3	3	3	3	3	3	3	3	2	4	4	3	3	4	2	3
R75	3	3	4	4	4	3	3	3	2	4	4	4	3	3	2	3
R76	4	4	4	4	4	4	4	4	4	4	4	4	4	4	4	4
R77	3	3	3	3	3	3	3	3	3	3	3	3	3	4	3	3
R78	3	3	3	3	3	3	4	4	4	3	3	3	4	3	4	4
R79	3	3	3	3	3	3	4	4	4	3	3	3	4	3	4	4
R80	3	3	3	2	3	1	4	4	4	3	3	3	4	3	4	3
R81	2	3	3	2	2	2	4	4	3	3	3	3	4	3	3	3
R82	4	3	4	3	4	4	4	3	4	3	4	3	4	3	4	4
R83	3	3	3	3	3	3	3	3	3	3	3	3	3	4	3	4
R84	3	3	3	3	3	3	3	3	3	3	3	3	3	3	3	2
R85	3	3	3	3	3	3	3	3	3	3	3	3	3	3	3	3
R86	3	3	3	3	3	3	3	3	3	3	3	3	3	3	3	3
R87	3	3	3	3	3	3	3	3	3	3	3	3	3	3	3	2
R88	3	3	3	3	3	3	3	3	3	3	3	3	3	3	3	3
R89	3	3	3	3	3	3	3	3	3	3	3	3	3	3	3	2
R90	3	3	3	3	3	3	3	3	3	3	3	3	3	3	3	3
R91	3	3	3	3	3	3	3	3	3	3	3	3	3	3	3	2
R92	3	3	3	3	3	3	3	3	3	3	3	3	3	3	3	4
R93	3	3	3	3	3	3	3	3	3	3	3	3	3	3	3	3
R94	3	3	3	3	3	3	3	3	3	3	3	3	3	3	3	3
R95	3	3	3	3	3	3	3	3	3	3	3	3	3	3	3	3
R96	3	3	3	3	3	3	3	3	3	3	3	3	3	3	3	3
R97	3	3	3	3	3	3	3	3	3	3	3	3	3	3	3	3
R98	3	3	3	3	3	3	3	3	3	3	3	3	3	3	3	4
R99	3	3	3	3	3	3	3	3	3	3	3	3	3	3	3	3
R100	3	3	3	3	3	3	3	3	3	3	3	3	3	3	3	4
R101	3	3	3	3	3	3	3	3	3	3	3	3	3	3	3	3
R102	3	3	3	3	3	3	3	3	3	3	3	3	3	3	3	3
R103	3	3	3	3	3	3	3	3	3	3	3	3	3	2	3	4
R104	3	3	3	3	3	3	3	3	3	3	3	3	3	3	3	3
R105	3	3	3	3	3	3	3	3	3	3	3	3	3	2	3	3
R106	3	3	3	3	3	3	3	3	3	3	3	3	3	3	3	3
R107	3	3	3	3	3	3	3	3	3	3	3	3	3	2	3	4
R108	3	3	3	3	3	3	3	3	3	3	3	3	3	2	3	3

No. responden	Kualitas Pelayanan															
	P1	P2	P3	P4	P5	P6	P7	P8	P9	P10	P11	P12	P13	P14	P15	P16
R109	3	3	3	3	3	3	3	3	3	3	3	3	3	3	3	3
R110	3	3	3	3	3	3	3	3	3	3	3	3	3	3	3	4
R111	3	3	3	3	3	3	3	3	3	3	3	3	3	3	3	3
R112	3	3	3	3	3	3	3	3	3	3	3	3	3	2	3	3
R113	3	3	3	3	3	3	3	3	3	3	3	3	3	3	3	4
R114	3	3	3	3	3	3	3	3	3	3	3	3	3	2	3	3
R115	3	3	3	3	3	3	3	3	3	3	3	3	3	3	3	4
R116	3	3	3	3	3	3	3	3	3	3	3	3	3	2	3	3
R117	3	3	3	3	3	3	3	3	3	3	3	3	3	3	3	4
R118	3	3	3	3	3	3	3	3	3	3	3	3	3	3	3	3
R119	3	3	3	3	3	3	3	3	3	3	3	3	3	3	3	4
R120	3	3	3	3	3	3	3	3	3	3	3	3	3	3	3	3
R121	3	3	3	3	3	3	3	3	3	3	3	3	3	2	3	3
R122	4	3	4	4	4	3	3	4	3	3	3	4	3	3	3	4
R123	3	3	3	4	3	3	4	2	3	4	4	4	4	3	3	3
R124	3	3	3	4	3	3	4	2	3	4	4	4	4	3	3	3
R125	3	3	3	3	4	3	1	2	2	3	2	3	1	4	2	3
R126	4	3	3	3	3	3	3	3	4	3	3	4	3	3	4	3
R127	3	4	3	3	4	4	4	3	4	4	3	3	4	3	4	4
R128	3	3	3	3	3	3	2	3	4	3	3	3	2	3	4	3
R129	4	4	4	4	4	4	3	4	4	4	3	3	3	3	4	3
R130	4	4	4	4	3	3	4	4	3	3	4	4	4	3	3	4
R131	4	4	4	4	3	3	4	4	3	3	4	4	4	3	3	4
R132	3	3	3	3	3	3	4	4	3	3	3	3	4	3	3	4
R133	4	4	4	4	3	3	3	4	3	3	3	3	3	4	3	4
R134	4	3	4	4	3	3	3	4	4	4	3	3	3	4	4	4
R135	4	4	4	3	3	3	3	3	4	4	4	4	3	3	4	4
R136	2	2	2	2	3	3	3	3	4	4	4	3	3	2	4	4
R137	3	3	4	4	3	3	3	3	4	4	4	3	3	4	4	4
R138	2	3	3	3	3	3	2	3	3	3	4	3	2	4	3	4
R139	2	2	2	2	3	3	2	3	3	3	3	3	2	3	3	3
R140	4	3	4	4	3	3	4	3	3	3	3	3	4	2	3	4
R141	3	3	3	3	3	3	4	3	3	3	3	3	4	4	3	3
R142	3	3	3	3	3	3	4	3	4	4	4	3	4	3	4	3
R143	3	3	3	3	3	3	3	4	4	4	4	4	3	3	4	3
R144	3	4	4	4	3	3	3	4	4	4	4	3	3	3	4	2

No. responden	Kualitas Pelayanan															
	P1	P2	P3	P4	P5	P6	P7	P8	P9	P10	P11	P12	P13	P14	P15	P16
R145	3	3	3	3	3	3	3	4	3	4	4	3	3	4	3	3
R146	3	3	3	3	3	3	3	4	3	3	4	3	3	4	3	3
R147	3	3	3	3	3	3	3	4	3	3	3	4	3	3	3	3
R148	3	3	3	3	3	3	2	3	3	3	3	4	2	4	3	4
R149	4	4	3	3	3	3	3	3	3	3	3	3	3	4	3	4
R150	3	4	3	4	4	3	4	3	3	3	3	3	4	3	3	4
R151	3	3	3	3	3	3	3	3	3	3	3	3	3	3	3	3
R152	4	3	3	4	4	3	3	3	3	3	3	3	3	3	3	3
R153	3	3	3	3	3	3	4	3	3	3	3	3	4	3	3	3
R154	4	4	4	4	4	3	4	3	4	3	3	3	4	4	4	4
R155	3	4	3	4	4	3	3	3	4	3	3	3	3	3	4	3
R156	3	3	3	3	3	3	3	3	4	3	3	3	3	4	4	4
R157	4	4	3	3	4	3	3	3	4	3	3	3	3	3	4	4
R158	4	3	3	4	3	3	3	4	3	3	3	3	3	4	3	3
R159	4	3	3	4	3	3	4	3	3	3	3	3	4	4	3	3
R160	4	3	3	4	3	3	4	4	3	3	3	3	4	4	3	4
R161	3	3	4	3	3	2	3	4	4	4	4	4	3	4	3	4
R162	3	3	3	4	4	4	3	3	4	3	3	3	4	4	4	4
R163	3	3	4	4	4	4	3	4	3	3	3	3	3	3	3	3
R164	3	3	3	3	3	3	2	3	3	4	3	3	3	3	3	3
R165	3	3	3	3	3	3	3	3	3	4	4	4	3	4	4	4
R166	4	3	3	3	3	3	3	4	1	3	3	3	3	3	3	3
R167	3	3	3	3	4	4	2	3	3	4	3	4	3	4	3	3
R168	4	3	3	3	3	3	3	2	2	3	2	3	3	3	3	3
R169	3	3	3	3	3	3	3	4	3	3	4	4	3	4	2	3
R170	3	3	3	3	3	3	3	3	4	3	3	3	3	3	4	3
R171	3	4	4	4	4	4	3	3	3	3	3	3	4	4	4	4
R172	3	3	3	3	3	3	3	2	3	3	4	4	3	3	4	3
R173	4	4	4	3	3	4	3	3	3	4	4	4	4	3	3	3
R174	3	3	3	3	3	3	2	3	3	3	3	3	4	3	3	3
R175	3	4	4	3	4	4	3	1	2	3	3	2	4	3	4	3
R176	3	4	3	3	3	3	3	3	3	3	4	4	2	4	3	4
R177	3	3	4	3	3	3	3	3	3	3	3	3	3	3	3	3
R178	2	2	3	4	4	4	3	3	2	3	4	2	3	3	3	3

No. responden	Kualitas Pelayanan															
	P1	P2	P3	P4	P5	P6	P7	P8	P9	P10	P11	P12	P13	P14	P15	P16
R179	3	3	3	3	4	3	3	3	3	3	3	3	4	3	4	4
R180	3	3	3	3	4	3	3	3	4	3	3	3	3	3	4	3
R181	3	3	3	3	3	3	3	2	4	3	3	3	4	4	4	2
R182	3	3	3	3	3	3	4	4	4	3	3	3	3	3	3	3
R183	3	3	3	3	3	3	3	3	3	3	3	3	3	3	3	3
R184	3	3	3	3	3	3	3	2	2	3	3	3	3	4	3	4
R185	3	3	3	3	4	3	3	3	3	3	3	3	3	3	3	3
R186	3	3	3	3	4	3	3	3	3	3	3	3	4	3	3	4
R187	3	3	3	3	3	3	3	3	3	3	3	3	2	3	2	3
R188	3	3	3	3	3	3	2	2	2	3	3	3	4	3	4	3
R189	3	3	3	3	3	3	2	2	3	3	3	3	4	3	4	4
R190	4	3	2	3	3	3	3	3	3	3	3	3	3	3	2	4
R191	3	3	3	3	4	4	3	3	3	3	3	3	3	4	3	3
R192	3	3	3	4	4	3	3	3	3	3	3	3	3	4	3	4
R193	3	2	3	3	3	4	3	3	3	3	4	3	4	3	4	3
R194	3	3	3	3	4	3	4	3	3	4	3	3	3	4	4	4
R195	3	3	3	3	3	4	3	3	3	3	3	3	3	3	4	3
R196	4	3	4	3	3	3	3	3	3	3	3	3	4	4	4	4
R197	3	3	3	3	3	3	3	2	2	3	4	3	4	3	3	3
R198	3	3	4	3	3	3	3	3	3	3	3	3	3	3	4	3
R199	3	2	2	3	4	4	3	3	3	3	3	3	3	3	2	3
R200	3	3	3	3	3	3	3	2	2	3	3	2	4	4	4	4
R201	3	3	3	3	3	3	3	3	3	3	3	3	4	4	4	4
R202	3	3	4	4	3	4	4	4	4	4	3	3	2	3	3	3
R203	3	3	4	3	3	3	3	3	3	3	4	4	3	3	3	3
R204	4	4	4	4	4	4	2	2	2	3	4	4	3	4	1	4
R205	3	3	3	3	3	4	3	3	3	4	4	4	3	4	3	3

No. responden	Kepercayaan									Kepuasan Pelanggan			Loyalitas Pelanggan			
	P17	P18	P19	P20	P21	P22	P23	P24	P25	P26	P27	P28	P29	P30	P31	P32
R1	2	3	3	3	3	3	3	3	3	3	3	3	3	3	3	3
R2	4	3	4	4	4	4	4	4	3	4	3	3	4	4	4	4
R3	4	4	4	4	4	4	4	4	4	4	4	4	4	4	4	4
R4	3	3	3	3	3	3	3	3	3	3	3	3	3	3	3	3
R5	3	3	3	3	3	3	3	3	3	3	4	3	3	3	3	3
R6	3	3	3	3	3	3	3	3	3	3	3	3	2	3	3	3
R7	4	3	4	4	3	4	3	4	3	4	3	4	4	3	4	4
R8	3	3	3	3	3	3	3	3	3	3	3	3	3	3	3	3
R9	3	4	4	4	3	4	4	3	4	4	3	4	3	3	3	3
R10	3	3	3	3	3	3	3	3	3	3	3	3	3	3	3	3
R11	4	3	3	3	4	3	4	3	4	4	4	4	3	3	3	3
R12	3	4	3	3	4	4	3	4	3	4	4	4	3	3	3	4
R13	3	3	3	3	3	4	3	3	3	3	3	3	3	3	3	3
R14	4	3	3	3	3	3	3	3	3	4	3	4	4	3	3	4
R15	4	4	4	4	4	4	4	4	4	4	3	4	4	3	4	4
R16	3	3	3	3	3	3	3	3	3	3	3	3	4	2	3	3
R17	3	2	3	3	3	3	3	3	3	3	3	3	3	3	3	3
R18	4	4	4	4	4	4	3	4	4	4	4	4	4	3	4	4
R19	4	4	3	3	3	3	3	3	2	3	3	4	4	3	3	3
R20	3	3	3	4	4	4	2	3	3	4	3	4	3	4	3	3
R21	3	3	3	3	2	2	3	3	2	3	3	3	3	3	3	2
R22	3	3	3	3	3	3	3	3	3	3	3	3	3	3	3	3
R23	3	3	3	3	3	3	3	3	3	3	3	3	3	3	3	3
R24	3	3	3	3	3	3	3	3	3	3	3	3	3	3	3	3
R25	3	3	3	3	3	3	3	3	4	3	4	4	3	3	3	4
R26	3	3	3	3	3	3	3	3	4	3	4	4	3	3	3	4
R27	3	3	3	3	3	3	3	3	3	3	3	3	3	3	3	3
R28	3	3	3	3	3	3	3	3	3	3	3	3	3	3	3	3
R29	3	3	3	3	3	3	3	3	3	3	3	3	3	3	3	3
R30	3	3	3	3	3	3	3	3	3	3	3	3	3	3	3	3
R31	3	4	4	4	4	4	4	4	4	3	3	3	3	3	3	3
R32	3	3	3	2	3	3	3	3	3	3	3	3	3	3	3	3
R33	3	2	3	3	3	3	3	3	2	3	3	3	3	3	3	4
R34	3	3	3	4	3	3	3	3	3	4	4	4	3	3	3	3
R35	3	3	3	3	4	3	3	3	3	3	3	3	3	3	3	3

No. responden	Kepercayaan									Kepuasan Pelanggan			Loyalitas Pelanggan			
	P17	P18	P19	P20	P21	P22	P23	P24	P25	P26	P27	P28	P29	P30	P31	P32
R36	3	3	3	3	3	3	3	3	3	3	3	3	3	3	3	3
R37	3	3	3	3	3	3	3	3	3	3	3	3	3	3	3	3
R38	3	3	3	3	3	3	3	3	3	3	3	3	3	3	3	3
R39	4	4	4	4	4	4	4	4	4	3	4	3	3	3	3	3
R40	3	3	3	3	3	3	3	3	3	3	3	3	3	3	3	3
R41	4	4	4	3	4	3	3	4	3	3	3	3	3	3	3	3
R42	3	3	3	3	3	3	3	3	3	3	3	3	3	3	3	3
R43	3	3	3	3	3	3	3	3	3	3	3	3	3	3	3	3
R44	3	3	3	3	3	3	3	3	3	3	3	3	3	3	3	3
R45	3	3	4	3	3	4	4	4	3	4	4	4	4	3	3	3
R46	3	3	4	3	4	3	3	4	3	3	3	3	3	3	4	4
R47	4	4	4	4	4	4	4	4	4	4	4	4	4	4	4	4
R48	3	3	3	3	3	3	3	3	3	3	3	3	3	3	3	3
R49	3	3	3	3	3	3	3	3	3	3	3	3	3	3	3	3
R50	3	3	3	3	3	3	3	3	3	3	3	3	3	3	3	3
R51	3	3	3	3	4	3	4	3	3	3	4	3	4	3	3	4
R52	3	3	3	3	3	3	3	3	3	3	3	3	3	3	3	3
R53	3	3	3	3	4	4	3	4	4	4	3	4	4	4	4	4
R54	3	3	3	3	3	3	3	4	3	3	4	3	3	3	3	3
R55	3	3	3	3	3	3	3	3	3	3	3	3	3	3	3	3
R56	3	3	3	4	3	3	4	3	3	4	3	4	3	3	3	3
R57	3	3	2	2	3	3	3	2	2	3	3	3	2	2	2	2
R58	3	2	3	2	4	2	2	3	3	3	3	3	3	3	3	3
R59	3	3	3	3	3	3	3	3	3	3	3	3	3	3	3	3
R60	3	3	3	3	3	3	3	3	3	3	3	3	3	3	3	3
R61	4	4	4	3	3	3	3	3	3	3	3	3	3	3	3	3
R62	3	3	3	3	2	2	1	3	2	3	3	3	3	2	2	2
R63	4	3	3	3	3	3	3	3	3	3	3	3	3	3	3	3
R64	3	3	3	3	3	3	3	3	3	3	3	3	3	3	3	3
R65	4	3	3	3	3	3	4	3	3	4	3	4	3	3	3	3
R66	3	3	3	3	3	3	4	4	3	3	3	3	3	3	3	4
R67	3	3	4	3	3	3	4	4	3	4	3	4	3	3	3	4
R68	3	3	3	3	3	3	3	2	3	3	3	3	3	2	2	3
R69	4	3	3	4	1	4	4	4	4	3	3	4	3	4	4	3
R70	3	3	3	3	4	3	3	4	4	4	3	4	3	4	3	4
R71	4	4	4	3	3	3	3	4	3	4	3	4	4	4	3	4

No. responden	Kepercayaan									Kepuasan Pelanggan			Loyalitas Pelanggan			
	P17	P18	P19	P20	P21	P22	P23	P24	P25	P26	P27	P28	P29	P30	P31	P32
R72	4	4	3	3	3	4	3	3	3	4	3	4	4	3	3	4
R73	4	4	4	4	4	3	3	3	3	3	3	3	3	3	3	3
R74	3	3	3	4	3	4	3	4	3	3	4	3	4	3	4	3
R75	3	4	3	3	4	3	4	3	3	4	3	4	3	3	4	3
R76	4	4	4	4	4	4	4	4	4	4	4	4	4	4	4	4
R77	3	3	3	3	3	3	3	3	3	3	3	3	3	3	3	3
R78	3	3	3	3	3	3	3	3	3	3	4	3	3	3	4	3
R79	3	3	3	3	3	3	3	3	3	3	3	3	3	3	3	3
R80	3	2	3	3	3	3	3	3	3	3	3	3	3	3	3	3
R81	3	3	4	3	4	4	4	3	2	3	3	3	3	3	3	3
R82	4	3	3	3	3	4	3	3	3	4	3	4	4	3	4	3
R83	3	3	3	3	3	3	3	3	3	3	3	3	3	3	3	3
R84	3	3	3	3	3	3	3	2	3	3	3	3	3	3	3	3
R85	3	3	3	3	3	3	3	2	3	3	3	3	3	3	3	3
R86	3	3	3	3	3	3	3	3	3	3	3	3	3	3	3	3
R87	3	3	3	3	3	3	3	2	3	3	3	3	3	3	3	3
R88	3	3	3	3	3	3	3	2	3	3	3	3	3	3	3	3
R89	3	3	3	3	3	3	3	3	3	3	3	3	3	3	3	3
R90	3	3	3	3	3	3	3	3	3	3	3	3	3	3	3	3
R91	3	3	3	3	3	3	3	2	3	3	3	3	3	3	3	3
R92	3	3	3	3	3	3	3	2	3	3	3	3	3	3	3	3
R93	3	3	3	3	3	3	3	3	3	3	3	3	3	3	3	3
R94	3	3	3	3	3	3	3	3	3	3	3	3	3	3	3	3
R95	3	3	3	3	3	3	3	3	3	3	3	3	3	3	3	3
R96	3	3	3	3	3	3	3	3	3	3	3	3	3	3	3	3
R97	3	3	3	3	3	3	3	3	3	3	3	3	3	3	3	3
R98	3	3	3	3	3	3	3	3	3	3	3	3	3	3	3	3
R99	3	3	3	3	3	3	3	3	3	3	3	3	3	3	3	3
R100	3	3	3	3	3	3	3	3	3	3	3	3	3	3	3	3
R101	3	3	3	3	3	3	3	3	3	3	3	3	3	3	3	3
R102	3	3	3	3	3	3	3	3	3	3	3	3	3	3	3	3
R103	3	3	3	3	3	3	3	3	3	3	3	3	3	3	3	3
R104	3	3	3	3	3	3	3	3	3	3	3	3	3	3	3	3
R105	3	3	3	3	3	3	3	3	3	3	3	3	3	3	3	3
R106	3	3	3	3	3	3	3	3	3	3	3	3	3	3	3	3
R107	3	3	3	3	3	3	3	3	3	3	3	3	3	3	3	3

No. responden	Kepercayaan									Kepuasan Pelanggan			Loyalitas Pelanggan			
	P17	P18	P19	P20	P21	P22	P23	P24	P25	P26	P27	P28	P29	P30	P31	P32
R108	3	3	3	3	3	3	3	3	3	3	3	3	3	3	3	3
R109	3	3	3	3	3	3	3	3	3	3	3	3	3	3	3	3
R110	3	3	3	3	3	3	3	3	3	3	3	3	3	3	3	3
R111	3	3	3	3	3	3	3	3	3	3	3	3	3	3	3	3
R112	3	3	3	3	3	3	3	3	3	3	3	3	3	3	3	3
R113	3	3	3	3	3	3	3	3	3	3	3	3	3	3	3	3
R114	3	3	3	3	3	3	3	3	3	3	3	3	3	3	3	3
R115	3	3	3	3	3	3	3	3	3	3	3	3	3	3	3	3
R116	3	3	3	3	3	3	3	3	3	3	3	3	3	3	3	3
R117	3	3	3	3	3	3	3	3	3	3	3	3	3	3	3	3
R118	3	3	3	3	3	3	3	3	3	3	3	3	3	3	3	3
R119	3	3	3	3	3	3	3	3	3	3	3	4	3	3	3	3
R120	3	3	3	3	3	3	3	3	3	3	3	4	3	3	3	3
R121	3	3	3	3	3	3	3	3	3	3	4	4	3	3	3	3
R122	3	4	3	4	3	3	3	3	4	4	3	4	4	3	4	3
R123	3	4	4	3	3	3	3	4	3	3	3	3	4	3	4	3
R124	3	4	4	3	3	3	3	4	3	3	3	3	4	3	4	3
R125	3	2	2	2	3	3	3	2	2	2	3	3	2	2	3	3
R126	3	3	3	3	3	3	4	3	3	3	4	4	4	3	4	3
R127	3	4	4	3	4	3	3	3	3	3	3	3	3	3	3	3
R128	3	3	3	3	3	3	3	3	3	3	3	3	3	3	3	3
R129	3	3	3	3	3	3	3	3	3	3	3	3	3	3	3	3
R130	3	2	3	3	3	3	3	3	3	3	4	3	4	4	4	4
R131	3	2	3	3	3	3	3	3	3	4	4	3	3	3	3	3
R132	3	2	3	3	3	3	3	3	3	4	4	3	3	3	3	3
R133	3	2	3	3	3	3	3	3	3	4	3	3	3	3	3	3
R134	2	3	3	4	3	3	3	3	4	3	4	3	3	3	3	3
R135	2	3	4	4	4	4	4	4	4	4	3	4	3	4	4	4
R136	2	3	4	4	4	4	3	4	4	3	4	3	3	3	3	3
R137	3	3	4	3	3	4	3	3	3	3	3	3	3	3	3	3
R138	3	2	4	3	3	4	3	3	3	3	3	3	4	4	4	4
R139	3	3	3	3	3	3	3	3	3	4	3	4	4	4	4	4
R140	3	2	3	3	3	3	3	3	3	4	3	4	3	3	3	3
R141	3	3	3	3	4	3	4	3	3	3	4	4	3	3	3	3
R142	4	2	4	3	4	3	4	3	3	4	4	3	3	3	3	3
R143	4	4	4	4	4	3	4	3	4	4	4	4	3	3	3	3

No. responden	Kepercayaan									Kepuasan Pelanggan			Loyalitas Pelanggan			
	P17	P18	P19	P20	P21	P22	P23	P24	P25	P26	P27	P28	P29	P30	P31	P32
R144	4	3	4	4	3	4	4	4	3	4	4	3	3	3	3	3
R145	3	3	3	4	3	4	3	4	4	4	3	4	3	3	3	3
R146	2	4	3	3	3	4	3	3	4	3	4	3	3	3	3	3
R147	4	2	3	3	4	4	3	3	3	3	3	3	3	3	3	3
R148	3	3	3	3	4	4	3	3	4	4	3	4	3	3	3	3
R149	2	3	3	3	4	3	3	3	3	3	4	3	3	3	3	3
R150	3	4	3	3	3	3	3	3	4	3	4	3	3	3	3	3
R151	3	3	3	4	3	3	3	4	3	4	3	3	4	3	4	4
R152	3	4	3	3	3	3	3	3	3	4	3	4	3	4	3	3
R153	3	4	4	3	3	3	3	3	4	3	4	3	3	3	3	3
R154	4	4	4	4	4	4	4	3	3	4	3	4	3	4	3	4
R155	4	3	3	4	3	3	4	3	4	4	3	4	3	3	3	3
R156	4	3	4	3	3	3	4	4	4	3	4	3	3	3	3	3
R157	3	4	4	3	4	3	3	4	3	3	3	4	3	3	3	3
R158	3	3	3	4	3	3	3	3	4	3	3	4	3	3	3	3
R159	3	4	3	4	3	3	3	3	3	3	4	4	3	3	3	3
R160	3	3	4	3	4	3	3	3	4	3	4	3	4	3	4	4
R161	3	3	3	3	3	3	3	3	3	4	4	4	4	4	4	4
R162	3	3	3	3	3	3	3	3	3	3	3	4	4	4	4	4
R163	3	3	3	3	3	3	3	3	3	3	3	3	3	3	3	3
R164	3	3	3	3	3	3	3	3	3	3	3	3	3	3	3	3
R165	3	3	3	3	3	3	3	3	3	4	3	3	4	4	4	4
R166	3	3	3	3	3	3	3	3	3	3	3	3	3	3	3	3
R167	3	3	3	3	3	3	3	3	3	3	3	4	4	4	4	4
R168	3	3	3	3	3	3	3	3	3	3	3	3	3	4	3	3
R169	3	3	3	3	3	3	3	3	3	3	3	4	3	3	4	3
R170	3	3	3	3	3	3	3	3	3	3	3	3	3	3	4	3
R171	3	3	3	3	3	3	3	3	3	3	3	3	3	3	3	3
R172	3	4	3	4	3	3	3	3	4	4	3	3	3	3	3	3
R173	3	4	4	3	3	3	3	4	3	3	3	3	3	3	4	3
R174	3	4	4	3	3	3	3	4	3	3	3	3	3	3	4	3
R175	3	3	3	2	3	3	3	3	3	3	3	3	2	3	3	3
R176	3	3	3	3	3	3	4	3	3	3	3	4	4	3	4	3
R177	3	4	4	3	4	3	3	4	3	4	4	4	3	3	3	4
R178	3	3	3	3	3	3	3	3	3	4	3	3	3	3	3	3
R179	3	3	3	3	3	3	3	3	3	4	3	3	3	3	3	3

No. responden	Kepercayaan									Kepuasan Pelanggan			Loyalitas Pelanggan			
	P17	P18	P19	P20	P21	P22	P23	P24	P25	P26	P27	P28	P29	P30	P31	P32
R180	3	3	3	3	3	3	3	3	3	4	3	3	3	3	4	4
R181	3	3	3	3	3	3	3	3	3	3	3	4	4	3	3	3
R182	3	3	3	3	3	3	3	3	3	3	3	3	3	3	4	3
R183	3	3	3	3	3	3	3	3	3	3	3	3	4	4	4	3
R184	3	3	3	4	3	3	3	3	4	4	3	3	4	3	3	4
R185	3	3	4	4	4	4	4	4	4	4	4	4	4	4	4	4
R186	3	3	4	4	4	4	3	4	4	4	3	3	3	3	3	3
R187	3	3	4	3	3	4	3	3	3	4	3	3	3	3	3	3
R188	3	3	4	3	3	4	3	3	3	4	3	4	4	4	4	4
R189	3	3	3	3	3	3	3	3	3	4	4	4	4	4	4	3
R190	3	3	3	3	3	3	3	3	3	3	4	3	3	3	3	2
R191	3	3	3	3	4	3	4	3	3	3	3	3	3	3	3	3
R192	4	3	4	3	4	3	4	3	3	3	3	3	4	4	4	3
R193	4	4	4	4	4	3	4	3	4	4	3	3	3	3	3	3
R194	4	3	4	4	3	4	4	4	3	4	3	4	3	3	3	3
R195	3	3	3	4	3	4	3	4	4	4	3	4	3	3	3	3
R196	3	4	3	3	3	4	3	3	4	3	3	3	3	3	4	3
R197	4	3	3	3	4	4	3	3	3	4	4	4	2	3	3	3
R198	3	3	3	3	4	4	3	3	4	3	3	3	3	3	3	4
R199	3	3	3	3	4	3	3	3	3	3	3	3	3	3	3	3
R200	3	4	3	3	3	3	3	3	4	3	3	4	3	3	3	3
R201	3	3	3	4	3	3	3	4	3	3	3	3	3	3	3	3
R202	3	4	3	3	3	3	3	3	3	4	4	3	3	3	3	3
R203	3	4	4	3	3	3	3	3	4	4	4	3	3	3	3	3
R204	4	4	4	4	4	4	4	4	4	4	4	4	3	3	3	3
R205	4	3	3	4	3	3	4	4	4	3	3	3	3	4	4	3

Kualitas Pelayanan

KMO and Bartlett's Test

Kaiser-Meyer-Olkin Measure of Sampling Adequacy.		.662
Bartlett's Test of Sphericity	Approx. Chi-Square	122.551
	df	3
	Sig.	.000

Anti-image Matrices

		Tang1	Tang2	Tang3
Anti-image Covariance	Tang1	.736	-.255	-.128
	Tang2	-.255	.638	-.271
	Tang3	-.128	-.271	.718
Anti-image Correlation	Tang1	.695[a]	-.372	-.176
	Tang2	-.372	.626[a]	-.400
	Tang3	-.176	-.400	.680[a]

a. Measures of Sampling Adequacy(MSA)

Component Matrix[a]

	Component
	1
Tang1	.772
Tang2	.843
Tang3	.784

Extraction Method: Principal Component Analysis.

a. 1 components extracted.

Reliability Statistics

Cronbach's Alpha	N of Items
.714	3

KMO and Bartlett's Test

Kaiser-Meyer-Olkin Measure of Sampling Adequacy.		.651
Bartlett's Test of Sphericity	Approx. Chi-Square	76.636
	df	3
	Sig.	.000

Anti-image Matrices

		Rea1	Rea2	Rea3
Anti-image Covariance	Rea1	.810	-.223	-.187
	Rea2	-.223	.778	-.238
	Rea3	-.187	-.238	.799
Anti-image Correlation	Rea1	.665[a]	-.281	-.233
	Rea2	-.281	.637[a]	-.302
	Rea3	-.233	-.302	.654[a]

a. Measures of Sampling Adequacy(MSA)

Component Matrix[a]

	Component
	1
Rea1	.749
Rea2	.780
Rea3	.760

Extraction Method: Principal Component Analysis.

a. 1 components extracted.

Reliability Statistics

Cronbach's Alpha	N of Items
.641	3

KMO and Bartlett's Test

Kaiser-Meyer-Olkin Measure of Sampling Adequacy.		.633
Bartlett's Test of Sphericity	Approx. Chi-Square	68.574
	df	3
	Sig.	.000

Anti-image Matrices

		Res1	Res2	Res3
Anti-image Covariance	Res1	.808	-.148	-.271
	Res2	-.148	.854	-.210
	Res3	-.271	-.210	.779
Anti-image Correlation	Res1	.629[a]	-.178	-.341
	Res2	-.178	.676[a]	-.257
	Res3	-.341	-.257	.608[a]

a. Measures of Sampling Adequacy(MSA)

Component Matrix[a]

	Component
	1
Res1	.757
Res2	.707
Res3	.790

Extraction Method: Principal Component Analysis.

a. 1 components extracted.

Reliability Statistics

Cronbach's Alpha	N of Items
.614	3

KMO and Bartlett's Test

Kaiser-Meyer-Olkin Measure of Sampling Adequacy.		.660
Bartlett's Test of Sphericity	Approx. Chi-Square	113.263
	df	3
	Sig.	.000

Anti-image Matrices

		Ass1	Ass2	Ass3
Anti-image Covariance	Ass1	.787	-.194	-.167
	Ass2	-.194	.675	-.294
	Ass3	-.167	-.294	.689
Anti-image Correlation	Ass1	.727[a]	-.266	-.226
	Ass2	-.266	.634[a]	-.431
	Ass3	-.226	-.431	.643[a]

a. Measures of Sampling Adequacy(MSA)

Component Matrix[a]

	Component
	1
Ass1	.742
Ass2	.824
Ass3	.812

Extraction Method: Principal Component Analysis.

a. 1 components extracted.

Reliability Statistics

Cronbach's Alpha	N of Items
.705	3

KMO and Bartlett's Test

Kaiser-Meyer-Olkin Measure of Sampling Adequacy.		.660
Bartlett's Test of Sphericity	Approx. Chi-Square	122.983
	df	6
	Sig.	.000

Anti-image Matrices

		Emp1	Emp2	Emp3	Emp4
Anti-image Covariance	Emp1	.754	-.001	-.290	-.152
	Emp2	-.001	.808	-.091	-.282
	Emp3	-.290	-.091	.747	-.111
	Emp4	-.152	-.282	-.111	.737
Anti-image Correlation	Emp1	.649[a]	-.002	-.387	-.204
	Emp2	-.002	.651[a]	-.117	-.365
	Emp3	-.387	-.117	.669[a]	-.149
	Emp4	-.204	-.365	-.149	.668[a]

a. Measures of Sampling Adequacy(MSA)

Component Matrix[a]

	Component
	1
Emp1	.706
Emp2	.633
Emp3	.730
Emp4	.748

Extraction Method: Principal Component Analysis.

a. 1 components extracted.

Reliability Statistics

Cronbach's Alpha	N of Items
.662	4

Kepercayaan

KMO and Bartlett's Test

Kaiser-Meyer-Olkin Measure of Sampling Adequacy.		.604
Bartlett's Test of Sphericity	Approx. Chi-Square	73.702
	df	3
	Sig.	.000

Anti-image Matrices

		Abili1	Abili2	Abili3
Anti-image Covariance	Abili1	.861	-.075	-.237
	Abili2	-.075	.800	-.300
	Abili3	-.237	-.300	.735
Anti-image Correlation	Abili1	.659[a]	-.090	-.298
	Abili2	-.090	.607[a]	-.391
	Abili3	-.298	-.391	.574[a]

a. Measures of Sampling Adequacy(MSA)

Component Matrix[a]

	Component
	1
Abili1	.680
Abili2	.747
Abili3	.824

Extraction Method: Principal Component Analysis.

a. 1 components extracted.

Reliability Statistics

Cronbach's Alpha	N of Items
.612	3

KMO and Bartlett's Test

Kaiser-Meyer-Olkin Measure of Sampling Adequacy.		.587
Bartlett's Test of Sphericity	Approx. Chi-Square	83.465
	df	3
	Sig.	.000

Anti-image Matrices

		Bene1	Bene2	Bene3
Anti-image Covariance	Bene1	.760	-.045	-.326
	Bene2	-.045	.868	-.230
	Bene3	-.326	-.230	.696
Anti-image Correlation	Bene1	.583[a]	-.055	-.449
	Bene2	-.055	.662[a]	-.296
	Bene3	-.449	-.296	.560[a]

a. Measures of Sampling Adequacy(MSA)

Component Matrix[a]

	Component
	1
Bene1	.767
Bene2	.652
Bene3	.842

Extraction Method: Principal Component Analysis.

a. 1 components extracted.

Reliability Statistics

Cronbach's Alpha	N of Items
.620	3

KMO and Bartlett's Test

Kaiser-Meyer-Olkin Measure of Sampling Adequacy.		.643
Bartlett's Test of Sphericity	Approx. Chi-Square	65.859
	df	3
	Sig.	.000

Anti-image Matrices

		Inte1	Inte2	Inte3
Anti-image Covariance	Inte1	.838	-.196	-.199
	Inte2	-.196	.813	-.239
	Inte3	-.199	-.239	.811
Anti-image Correlation	Inte1	.660[a]	-.237	-.241
	Inte2	-.237	.636[a]	-.294
	Inte3	-.241	-.294	.634[a]

a. Measures of Sampling Adequacy(MSA)

Component Matrix[a]

	Component
	1
Inte1	.732
Inte2	.760
Inte3	.762

Extraction Method: Principal Component Analysis.

a. 1 components extracted.

Reliability Statistics

Cronbach's Alpha	N of Items
.614	3

Kepuasan Pelanggan

KMO and Bartlett's Test

Kaiser-Meyer-Olkin Measure of Sampling Adequacy.		.567
Bartlett's Test of Sphericity	Approx. Chi-Square	92.719
	df	3
	Sig.	.000

Anti-image Matrices

		Satis1	Satis2	Satis3
Anti-image Covariance	Satis1	.667	-.098	-.363
	Satis2	-.098	.933	-.096
	Satis3	-.363	-.096	.667
Anti-image Correlation	Satis1	.546[a]	-.125	-.544
	Satis2	-.125	.775[a]	-.122
	Satis3	-.544	-.122	.546[a]

a. Measures of Sampling Adequacy(MSA)

Component Matrix[a]

	Component
	1
Satis1	.844
Satis2	.540
Satis3	.843

Extraction Method: Principal Component Analysis.

a. 1 components extracted.

Reliability Statistics

Cronbach's Alpha	N of Items
.617	3

Loyalitas Pelanggan

KMO and Bartlett's Test

Kaiser-Meyer-Olkin Measure of Sampling Adequacy.		.770
Bartlett's Test of Sphericity	Approx. Chi-Square	287.587
	df	6
	Sig.	.000

Anti-image Matrices

		Loyal1	Loyal2	Loyal3	Loyal4
Anti-image Covariance	Loyal1	.530	-.037	-.228	-.175
	Loyal2	-.037	.590	-.195	-.179
	Loyal3	-.228	-.195	.498	-.050
	Loyal4	-.175	-.179	-.050	.617
Anti-image Correlation	Loyal1	.756[a]	-.067	-.443	-.305
	Loyal2	-.067	.788[a]	-.361	-.297
	Loyal3	-.443	-.361	.743[a]	-.091
	Loyal4	-.305	-.297	-.091	.807[a]

a. Measures of Sampling Adequacy(MSA)

Component Matrix[a]

	Component
	1
Loyal1	.820
Loyal2	.792
Loyal3	.839
Loyal4	.780

Extraction Method: Principal Component Analysis.

a. 1 components extracted.

Reliability Statistics

Cronbach's Alpha	N of Items
.822	4

LAMPIRAN V

HASIL UJI LISREL

Hasil Pengukuran Validitas Indikator *Order Construct* yang tidak Valid

INDIKATOR	KONSTRUK	LOADING FACTOR	NILAI T	KETERANGAN
TANG1	KUALITAS PELAYANAN	0,48	-	Tidak Digunakan
REA2		0,41	4,42	Tidak Digunakan
REA3		0,39	4,32	Tidak Digunakan
RES1		0,26	3,13	Tidak Digunakan
RES2		0,30	3,49	Tidak Digunakan
RES3		0,27	3,19	Tidak Digunakan
ASS1		0,48	4,94	Tidak Digunakan
EMP1		0,25	3,02	Tidak Digunakan
EMP2		0,19	2,41	Tidak Digunakan
EMP3		0,23	2,82	Tidak Digunakan
EMP4		0,19	2,31	Tidak Digunakan
ABILI1	KEPERCAYAAN	0,46	-	Tidak Digunakan
ABILI2		0,48	4,97	Tidak Digunakan
BENE2		0,48	5,02	Tidak Digunakan
SATIS2	KEPUASAN PELANGGAN	0,34	4,30	Tidak Digunakan

HASIL VALIDITAS DAN RELIABILITAS LISREL

DATE: 2/17/2016
TIME: 12:30

L I S R E L 8.51

BY

Karl G. Jöreskog & Dag Sörbom

This program is published exclusively by
Scientific Software International, Inc.
7383 N. Lincoln Avenue, Suite 100
Lincolnwood, IL 60712, U.S.A.
Phone: (800)247-6113, (847)675-0720, Fax: (847)675-2140
Copyright by Scientific Software International, Inc., 1981-2001
Use of this program is subject to the terms specified in the
Universal Copyright Convention.
Website: www.ssicentral.com

The following lines were read from file D:\data\uji1.pr2:

```
raw data from file uji.psf
latent vartiables: SERQU TRUST SATIS LOYAL
relationships:
TANG1 = 1*SERQU
TANG2 = SERQU
TANG3 = SERQU
REA1 = SERQU
REA2 = SERQU
REA3 = SERQU
RES1 = SERQU
RES2 = SERQU
RES3 = SERQU
ASS1 = SERQU
```

```
ASS2 = SERQU
ASS3 = SERQU
EMP1 = SERQU
EMP2 = SERQU
EMP3 = SERQU
EMP4 = SERQU
ABILI1 = 1*TRUST
ABILI2 = TRUST
ABILI3 = TRUST
BENE1 = TRUST
BENE2 = TRUST
BENE3 = TRUST
INTE1 = TRUST
INTE2 = TRUST
INTE3 = TRUST
SATIS1 = 1*SATIS
SATIS2 = SATIS
SATIS3 = SATIS
LOYAL1 = 1*LOYAL
LOYAL2 = LOYAL
LOYAL3 = LOYAL
LOYAL4 = LOYAL

admissibility check off

options: sc
path diagram
end of problem

Sample Size =   205


      Covariance Matrix

          TANG1     TANG2     TANG3      REA1      REA2      REA3
        --------  --------  --------  --------  --------  --------
  TANG1     0.19
  TANG2     0.08      0.16
  TANG3     0.08      0.10      0.22
```

REA1	0.08	0.07	0.10	0.18		
REA2	0.03	0.05	0.05	0.07	0.20	
REA3	0.03	0.03	0.04	0.07	0.08	0.20
RES1	0.03	0.02	0.04	0.04	0.00	-0.01
RES2	0.05	0.04	0.05	0.05	-0.01	-0.01
RES3	0.01	0.03	0.03	0.01	0.03	-0.01
ASS1	0.01	0.01	0.04	0.05	0.03	0.04
ASS2	0.03	0.03	0.07	0.05	0.03	0.06
ASS3	0.04	0.04	0.05	0.06	0.02	0.05
EMP1	0.03	0.02	0.04	0.03	0.01	0.01
EMP2	0.01	0.02	0.01	0.03	0.02	0.01
EMP3	0.00	0.03	0.04	-0.01	0.03	0.00
EMP4	0.04	0.05	0.01	0.03	0.01	-0.01
ABILI1	0.02	0.04	0.06	0.05	0.05	0.06
ABILI2	0.03	0.03	0.05	0.04	0.07	0.06
ABILI3	0.02	0.03	0.06	0.03	0.04	0.04
BENE1	0.04	0.03	0.04	0.04	0.05	0.05
BENE2	0.03	0.02	0.03	0.02	0.06	0.04
BENE3	0.02	0.03	0.05	0.01	0.04	0.05
INTE1	0.04	0.03	0.04	0.03	0.04	0.05
INTE2	0.03	0.03	0.05	0.02	0.04	0.04
INTE3	0.05	0.02	0.04	0.03	0.05	0.04
SATIS1	0.03	0.02	0.08	0.05	0.05	0.03
SATIS2	0.04	0.03	0.02	0.03	0.01	0.01
SATIS3	0.04	0.03	0.05	0.04	0.06	0.02
LOYAL1	0.01	0.02	0.02	0.03	0.03	0.01
LOYAL2	0.02	0.02	0.03	0.03	0.03	0.02
LOYAL3	0.02	0.02	0.03	0.03	0.04	0.03
LOYAL4	0.02	0.03	0.05	0.02	0.03	0.02

Covariance Matrix

	RES1	RES2	RES3	ASS1	ASS2	ASS3
RES1	0.29					
RES2	0.09	0.35				
RES3	0.14	0.13	0.39			
ASS1	0.02	0.03	0.07	0.15		
ASS2	0.04	0.03	0.00	0.07	0.20	
ASS3	0.01	0.07	0.02	0.06	0.10	0.19

EMP1	0.22	0.03	0.10	0.00	0.03	0.00
EMP2	0.04	0.06	0.08	0.00	0.02	0.02
EMP3	0.12	0.06	0.31	0.05	0.00	0.00
EMP4	0.10	0.08	0.12	-0.01	0.00	0.00
ABILI1	0.02	0.02	0.01	0.03	0.04	0.04
ABILI2	0.02	-0.02	0.02	0.04	0.04	0.05
ABILI3	0.04	0.01	0.04	0.05	0.07	0.05
BENE1	0.02	0.04	0.04	0.05	0.06	0.04
BENE2	0.01	0.01	-0.01	0.02	0.04	0.03
BENE3	0.00	0.01	0.00	0.03	0.06	0.03
INTE1	0.02	0.04	0.04	0.04	0.05	0.06
INTE2	0.01	0.01	0.02	0.04	0.08	0.05
INTE3	0.02	0.04	0.04	0.03	0.03	0.03
SATIS1	0.01	0.02	0.01	0.03	0.06	0.04
SATIS2	0.03	0.04	0.02	0.02	0.04	0.02
SATIS3	-0.01	0.00	0.03	0.03	0.05	0.05
LOYAL1	0.01	0.03	0.02	0.02	0.04	0.06
LOYAL2	0.00	0.01	0.02	0.02	0.02	0.01
LOYAL3	0.00	0.03	0.04	0.04	0.05	0.07
LOYAL4	-0.01	0.02	0.03	0.02	0.03	0.04

Covariance Matrix

	EMP1	EMP2	EMP3	EMP4	ABILI1	ABILI2
EMP1	0.33					
EMP2	0.07	0.39				
EMP3	0.17	0.10	0.42			
EMP4	0.13	0.18	0.15	0.49		
ABILI1	0.02	0.00	0.01	-0.04	0.17	
ABILI2	0.04	0.01	0.02	-0.03	0.05	0.24
ABILI3	0.05	-0.01	0.03	0.00	0.07	0.09
BENE1	0.02	0.01	0.04	0.00	0.05	0.07
BENE2	0.01	0.01	-0.02	0.01	0.04	0.05
BENE3	0.00	0.01	0.01	0.00	0.04	0.04
INTE1	0.01	0.04	0.03	0.00	0.07	0.04
INTE2	0.02	0.01	0.02	0.00	0.05	0.07
INTE3	0.03	0.03	0.06	0.05	0.02	0.08
SATIS1	0.01	0.00	0.03	0.02	0.07	0.04
SATIS2	0.02	0.02	0.00	0.01	0.01	0.03

SATIS3	0.00	0.03	0.04	0.01	0.06	0.06
LOYAL1	0.02	0.02	0.01	0.02	0.04	0.03
LOYAL2	0.02	0.01	0.03	0.03	0.03	0.01
LOYAL3	0.03	0.04	0.03	0.05	0.02	0.03
LOYAL4	0.00	0.02	0.04	0.00	0.03	0.01

Covariance Matrix

	ABILI3	BENE1	BENE2	BENE3	INTE1	INTE2
ABILI3	0.19					
BENE1	0.08	0.18				
BENE2	0.09	0.04	0.20			
BENE3	0.08	0.09	0.07	0.18		
INTE1	0.08	0.07	0.06	0.07	0.18	
INTE2	0.12	0.10	0.06	0.09	0.07	0.22
INTE3	0.06	0.11	0.06	0.08	0.06	0.08
SATIS1	0.07	0.09	0.06	0.08	0.06	0.07
SATIS2	0.04	0.03	0.05	0.03	0.04	0.04
SATIS3	0.03	0.07	0.04	0.07	0.06	0.06
LOYAL1	0.05	0.05	0.02	0.04	0.03	0.06
LOYAL2	0.04	0.04	0.03	0.05	0.04	0.05
LOYAL3	0.05	0.04	0.02	0.05	0.04	0.07
LOYAL4	0.05	0.04	0.06	0.06	0.04	0.07

Covariance Matrix

	INTE3	SATIS1	SATIS2	SATIS3	LOYAL1	LOYAL2
INTE3	0.20					
SATIS1	0.07	0.21				
SATIS2	0.06	0.04	0.17			
SATIS3	0.06	0.12	0.04	0.21		
LOYAL1	0.03	0.06	0.02	0.07	0.18	
LOYAL2	0.04	0.06	0.01	0.06	0.08	0.14
LOYAL3	0.04	0.04	0.02	0.05	0.12	0.09
LOYAL4	0.05	0.08	0.02	0.07	0.10	0.08

Covariance Matrix

	LOYAL3	LOYAL4
LOYAL3	0.18	
LOYAL4	0.09	0.17

Number of Iterations = 32

LISREL Estimates (Maximum Likelihood)

Measurement Equations

TANG1 = 1.00*SERQU, Errorvar.= 0.14 , R^2 = 0.25
(0.015)
9.38

TANG2 = 1.05*SERQU, Errorvar.= 0.11 , R^2 = 0.32
(0.19) (0.012)
5.59 9.06

TANG3 = 1.42*SERQU, Errorvar.= 0.13 , R^2 = 0.43
(0.24) (0.015)
6.03 8.46

REA1 = 1.29*SERQU, Errorvar.= 0.11 , R^2 = 0.42
(0.22) (0.013)
5.99 8.53

REA2 = 0.88*SERQU, Errorvar.= 0.17 , R^2 = 0.18
(0.19) (0.017)
4.61 9.63

REA3 = 0.83*SERQU, Errorvar.= 0.17 , R^2 = 0.16
(0.19) (0.017)
4.44 9.68

RES1 = 0.75*SERQU, Errorvar.= 0.26 , R^2 = 0.089
(0.21) (0.027)
3.54 9.88

RES2 = 0.87*SERQU, Errorvar.= 0.31 , R^2 = 0.10
(0.23) (0.032)
3.71 9.86

RES3 = 0.82*SERQU, Errorvar.= 0.36 , R^2 = 0.080
(0.24) (0.036)
3.38 9.91

ASS1 = 0.79*SERQU, Errorvar.= 0.12 , R^2 = 0.20
(0.16) (0.012)
4.78 9.57

ASS2 = 1.07*SERQU, Errorvar.= 0.15 , R^2 = 0.26
(0.20) (0.016)
5.25 9.33

ASS3 = 1.03*SERQU, Errorvar.= 0.14 , R^2 = 0.26
(0.20) (0.015)
5.23 9.34

EMP1 = 0.76*SERQU, Errorvar.= 0.30 , R^2 = 0.082
(0.22) (0.030)
3.41 9.90

EMP2 = 0.55*SERQU, Errorvar.= 0.38 , R^2 = 0.036
(0.23) (0.038)
2.36 10.02

EMP3 = 0.78*SERQU, Errorvar.= 0.39 , R^2 = 0.067
(0.25) (0.039)
3.14 9.94

EMP4 = 0.65*SERQU, Errorvar.= 0.47 , R^2 = 0.041
(0.26) (0.047)
2.50 10.01

ABILI1 = 1.00*TRUST, Errorvar.= 0.14 , R^2 = 0.21
(0.014)
9.67

ABILI2 = 1.20*TRUST, Errorvar.= 0.18 , R^2 = 0.23
(0.24) (0.019)
4.94 9.64

ABILI3 = 1.59*TRUST, Errorvar.= 0.093 , R^2 = 0.50
(0.26) (0.011)
6.04 8.52

BENE1 = 1.57*TRUST, Errorvar.= 0.094 , R^2 = 0.49
(0.26) (0.011)
6.02 8.57

BENE2 = 1.14*TRUST, Errorvar.= 0.16 , R^2 = 0.24
(0.23) (0.016)
5.00 9.61

BENE3 = 1.41*TRUST, Errorvar.= 0.10 , R^2 = 0.41
(0.24) (0.012)
5.80 8.98

INTE1 = 1.29*TRUST, Errorvar.= 0.12 , R^2 = 0.34
(0.23) (0.013)
5.55 9.27

INTE2 = 1.63*TRUST, Errorvar.= 0.12 , R^2 = 0.45
(0.28) (0.014)
5.92 8.79

INTE3 = 1.41*TRUST, Errorvar.= 0.13 , R^2 = 0.36
(0.25) (0.014)
5.61 9.21

SATIS1 = 1.00*SATIS, Errorvar.= 0.082 , R^2 = 0.62
(0.015)
5.32

SATIS2 = 0.38*SATIS, Errorvar.= 0.15 , R^2 = 0.12
(0.089) (0.015)
4.28 9.74

SATIS3 = 0.88*SATIS, Errorvar.= 0.10 , R^2 = 0.50
(0.11) (0.015)
8.17 7.11

LOYAL1 = 1.00*LOYAL, Errorvar.= 0.080 , R^2 = 0.57
(0.011)
7.45

LOYAL2 = 0.82*LOYAL, Errorvar.= 0.071 , R^2 = 0.50
(0.088) (0.0087)
9.30 8.10

LOYAL3 = 1.03*LOYAL, Errorvar.= 0.073 , R^2 = 0.60
(0.10) (0.010)
10.07 7.07

LOYAL4 = 0.90*LOYAL, Errorvar.= 0.089 , R^2 = 0.49
(0.098) (0.011)
9.20 8.20

Covariance Matrix of Independent Variables

	SERQU	TRUST	SATIS	LOYAL
SERQU	0.05			
	(0.01)			
	3.44			
TRUST	0.02	0.04		
	(0.01)	(0.01)		
	3.96	3.25		
SATIS	0.04	0.05	0.13	
	(0.01)	(0.01)	(0.02)	

	4.19	4.79	5.62	
LOYAL	0.03	0.03	0.07	0.11
	(0.01)	(0.01)	(0.01)	(0.02)
	3.73	4.28	5.24	5.83

Goodness of Fit Statistics

Degrees of Freedom = 458
Minimum Fit Function Chi-Square = 1378.03 (P = 0.0)
Normal Theory Weighted Least Squares Chi-Square = 1328.94 (P = 0.0)
Estimated Non-centrality Parameter (NCP) = 870.94
90 Percent Confidence Interval for NCP = (765.61 ; 983.89)

Minimum Fit Function Value = 6.76
Population Discrepancy Function Value (F0) = 4.27
90 Percent Confidence Interval for F0 = (3.75 ; 4.82)
Root Mean Square Error of Approximation (RMSEA) = 0.097
90 Percent Confidence Interval for RMSEA = (0.091 ; 0.10)
P-Value for Test of Close Fit (RMSEA < 0.05) = 0.00

Expected Cross-Validation Index (ECVI) = 7.20
90 Percent Confidence Interval for ECVI = (6.68 ; 7.75)
ECVI for Saturated Model = 5.18
ECVI for Independence Model = 13.94

Chi-Square for Independence Model with 496 Degrees of Freedom = 2780.35
Independence AIC = 2844.35
Model AIC = 1468.94
Saturated AIC = 1056.00
Independence CAIC = 2982.69
Model CAIC = 1771.55
Saturated CAIC = 3338.55

Normed Fit Index (NFI) = 0.50
Non-Normed Fit Index (NNFI) = 0.56
Parsimony Normed Fit Index (PNFI) = 0.47
Comparative Fit Index (CFI) = 0.60

Incremental Fit Index (IFI) = 0.60
Relative Fit Index (RFI) = 0.46

Critical N (CN) = 79.66

Root Mean Square Residual (RMR) = 0.028
Standardized RMR = 0.095
Goodness of Fit Index (GFI) = 0.71
Adjusted Goodness of Fit Index (AGFI) = 0.67
Parsimony Goodness of Fit Index (PGFI) = 0.62

The Modification Indices Suggest to Add the

Path to	from	Decrease in Chi-Square	New Estimate
REA1	TRUST	9.2	-0.59
ASS2	TRUST	12.1	0.75
ABILI3	SATIS	8.9	-0.38
LOYAL3	SATIS	8.5	-0.29

The Modification Indices Suggest to Add an Error Covariance

Between	and	Decrease in Chi-Square	New Estimate
TANG2	TANG1	21.5	0.04
TANG3	TANG2	14.5	0.04
REA3	REA2	16.6	0.05
RES1	REA3	7.9	-0.04
RES2	REA3	9.1	-0.05
RES2	RES1	10.2	0.07
RES3	REA1	11.6	-0.05
RES3	RES1	26.4	0.11
RES3	RES2	16.7	0.10
ASS1	TANG1	8.0	-0.03
ASS1	TANG2	11.3	-0.03
ASS1	RES3	10.6	0.05
ASS2	ASS1	12.6	0.04
ASS3	ASS1	9.5	0.03
ASS3	ASS2	29.3	0.06
EMP1	RES1	106.0	0.21
EMP1	RES3	10.3	0.08
EMP3	REA1	15.8	-0.06
EMP3	RES1	18.3	0.10

EMP3	RES3	119.9	0.29
EMP3	EMP1	36.0	0.15
EMP3	EMP2	9.2	0.08
EMP4	RES1	10.8	0.08
EMP4	RES3	10.5	0.09
EMP4	EMP1	18.2	0.11
EMP4	EMP2	33.3	0.17
EMP4	EMP3	17.6	0.13
ABILI1	EMP4	8.4	-0.05
BENE2	REA2	8.0	0.03
BENE2	BENE1	9.5	-0.03
BENE3	REA1	9.8	-0.03
INTE1	ABILI1	9.7	0.03
INTE2	ASS2	9.3	0.03
INTE2	ABILI3	10.6	0.03
INTE3	ABILI1	11.2	-0.03
INTE3	BENE1	13.9	0.03
SATIS1	TANG3	8.7	0.03
SATIS3	ABILI3	15.4	-0.03
LOYAL2	ASS3	11.2	-0.03
LOYAL2	LOYAL1	7.9	-0.02
LOYAL3	ASS3	7.9	0.02
LOYAL3	SATIS1	8.6	-0.02
LOYAL3	LOYAL1	8.1	0.03
LOYAL4	BENE2	12.9	0.03
LOYAL4	LOYAL3	8.5	-0.03

Standardized Solution

LAMBDA-X

	SERQU	TRUST	SATIS	LOYAL
TANG1	0.21	- -	- -	- -
TANG2	0.23	- -	- -	- -
TANG3	0.31	- -	- -	- -
REA1	0.28	- -	- -	- -
REA2	0.19	- -	- -	- -

REA3	0.18	- -	- -	- -
RES1	0.16	- -	- -	- -
RES2	0.19	- -	- -	- -
RES3	0.18	- -	- -	- -
ASS1	0.17	- -	- -	- -
ASS2	0.23	- -	- -	- -
ASS3	0.22	- -	- -	- -
EMP1	0.16	- -	- -	- -
EMP2	0.12	- -	- -	- -
EMP3	0.17	- -	- -	- -
EMP4	0.14	- -	- -	- -
ABILI1	- -	0.19	- -	- -
ABILI2	- -	0.23	- -	- -
ABILI3	- -	0.30	- -	- -
BENE1	- -	0.30	- -	- -
BENE2	- -	0.22	- -	- -
BENE3	- -	0.27	- -	- -
INTE1	- -	0.25	- -	- -
INTE2	- -	0.31	- -	- -
INTE3	- -	0.27	- -	- -
SATIS1	- -	- -	0.36	- -
SATIS2	- -	- -	0.14	- -
SATIS3	- -	- -	0.32	- -
LOYAL1	- -	- -	- -	0.32
LOYAL2	- -	- -	- -	0.27
LOYAL3	- -	- -	- -	0.33
LOYAL4	- -	- -	- -	0.29

PHI

	SERQU	TRUST	SATIS	LOYAL
SERQU	1.00			
TRUST	0.58	1.00		
SATIS	0.51	0.70	1.00	
LOYAL	0.40	0.52	0.56	1.00

Completely Standardized Solution

LAMBDA-X

	SERQU	TRUST	SATIS	LOYAL
TANG1	0.50	- -	- -	- -
TANG2	0.57	- -	- -	- -
TANG3	0.65	- -	- -	- -
REA1	0.65	- -	- -	- -
REA2	0.42	- -	- -	- -
REA3	0.40	- -	- -	- -
RES1	0.30	- -	- -	- -
RES2	0.32	- -	- -	- -
RES3	0.28	- -	- -	- -
ASS1	0.44	- -	- -	- -
ASS2	0.51	- -	- -	- -
ASS3	0.51	- -	- -	- -
EMP1	0.29	- -	- -	- -
EMP2	0.19	- -	- -	- -
EMP3	0.26	- -	- -	- -
EMP4	0.20	- -	- -	- -
ABILI1	- -	0.46	- -	- -
ABILI2	- -	0.48	- -	- -
ABILI3	- -	0.71	- -	- -
BENE1	- -	0.70	- -	- -
BENE2	- -	0.48	- -	- -
BENE3	- -	0.64	- -	- -
INTE1	- -	0.59	- -	- -
INTE2	- -	0.67	- -	- -
INTE3	- -	0.60	- -	- -
SATIS1	- -	- -	0.79	- -
SATIS2	- -	- -	0.34	- -
SATIS3	- -	- -	0.71	- -
LOYAL1	- -	- -	- -	0.75
LOYAL2	- -	- -	- -	0.71
LOYAL3	- -	- -	- -	0.78
LOYAL4	- -	- -	- -	0.70

PHI

	SERQU	TRUST	SATIS	LOYAL
SERQU	1.00			
TRUST	0.58	1.00		
SATIS	0.51	0.70	1.00	
LOYAL	0.40	0.52	0.56	1.00

THETA-DELTA

TANG1	TANG2	TANG3	REA1	REA2	REA3
0.75	0.68	0.57	0.58	0.82	0.84

THETA-DELTA

RES1	RES2	RES3	ASS1	ASS2	ASS3
0.91	0.90	0.92	0.80	0.74	0.74

THETA-DELTA

EMP1	EMP2	EMP3	EMP4	ABILI1	ABILI2
0.92	0.96	0.93	0.96	0.79	0.77

THETA-DELTA

ABILI3	BENE1	BENE2	BENE3	INTE1	INTE2
0.50	0.51	0.76	0.59	0.66	0.55

THETA-DELTA

INTE3	SATIS1	SATIS2	SATIS3	LOYAL1	LOYAL2
0.64	0.38	0.88	0.50	0.43	0.50

THETA-DELTA

LOYAL3	LOYAL4

```
--------   --------
   0.40       0.51

              Time used:    0.796 Seconds
```

HASIL UJI LISREL

DATE: 2/17/2016
TIME: 12:34

L I S R E L 8.51

BY

Karl G. Jöreskog & Dag Sörbom

This program is published exclusively by
Scientific Software International, Inc.
7383 N. Lincoln Avenue, Suite 100
Lincolnwood, IL 60712, U.S.A.
Phone: (800)247-6113, (847)675-0720, Fax: (847)675-2140
Copyright by Scientific Software International, Inc., 1981-2001
Use of this program is subject to the terms specified in the
Universal Copyright Convention.
Website: www.ssicentral.com

The following lines were read from file D:\data\uji1.pr2:

```
raw data from file uji.psf
latent vartiables: SERQU TRUST SATIS LOYAL
relationships:
!TANG1 = 1*SERQU
TANG2 = SERQU
TANG3 = SERQU
REA1 = SERQU
!REA2 = SERQU
!REA3 = SERQU
!RES1 = SERQU
!RES2 = SERQU
!RES3 = SERQU
!ASS1 = SERQU
ASS2 = SERQU
```

```
ASS3 = SERQU
!EMP1 = SERQU
!EMP2 = SERQU
!EMP3 = SERQU
!EMP4 = SERQU
!ABILI1 = 1*TRUST
!ABILI2 = TRUST
ABILI3 = TRUST
BENE1 = TRUST
!BENE2 = TRUST
BENE3 = TRUST
INTE1 = TRUST
INTE2 = TRUST
INTE3 = TRUST
SATIS1 = 1*SATIS
!SATIS2 = SATIS
SATIS3 = SATIS
LOYAL1 = 1*LOYAL
LOYAL2 = LOYAL
LOYAL3 = LOYAL
LOYAL4 = LOYAL

TRUST = SERQU
SATIS = SERQU TRUST
LOYAL = SERQU TRUST SATIS

set error covariance of TANG3 and TANG2 free
set error covariance of REA1 and TANG3 free
set error covariance of REA1 and TANG2 free
set error covariance of LOYAL3 and SATIS1 free
set error covariance of REA1 and BENE3 free
set error covariance of LOYAL4 and LOYAL3 free
set error covariance of TANG2 and SATIS1 free
set error covariance of ASS3 and INTE1 free
set error covariance of INTE2 and ABILI3 free
set error covariance of INTE3 and BENE1 free

admissibility check off

options: sc
```

path diagram
end of problem

Sample Size = 205

Covariance Matrix

	ABILI3	BENE1	BENE3	INTE1	INTE2	INTE3
ABILI3	0.19					
BENE1	0.08	0.18				
BENE3	0.08	0.09	0.18			
INTE1	0.08	0.07	0.07	0.18		
INTE2	0.12	0.10	0.09	0.07	0.22	
INTE3	0.06	0.11	0.08	0.06	0.08	0.20
SATIS1	0.07	0.09	0.08	0.06	0.07	0.07
SATIS3	0.03	0.07	0.07	0.06	0.06	0.06
LOYAL1	0.05	0.05	0.04	0.03	0.06	0.03
LOYAL2	0.04	0.04	0.05	0.04	0.05	0.04
LOYAL3	0.05	0.04	0.05	0.04	0.07	0.04
LOYAL4	0.05	0.04	0.06	0.04	0.07	0.05
TANG2	0.03	0.03	0.03	0.03	0.03	0.02
TANG3	0.06	0.04	0.05	0.04	0.05	0.04
REA1	0.03	0.04	0.01	0.03	0.02	0.03
ASS2	0.08	0.07	0.07	0.06	0.08	0.05
ASS3	0.06	0.05	0.04	0.07	0.06	0.04

Covariance Matrix

	SATIS1	SATIS3	LOYAL1	LOYAL2	LOYAL3	LOYAL4
SATIS1	0.21					
SATIS3	0.12	0.21				
LOYAL1	0.06	0.07	0.18			
LOYAL2	0.06	0.06	0.08	0.14		
LOYAL3	0.04	0.05	0.12	0.09	0.18	
LOYAL4	0.08	0.07	0.10	0.08	0.09	0.17
TANG2	0.02	0.03	0.02	0.02	0.02	0.03

TANG3	0.08	0.05	0.02	0.03	0.03	0.05
REA1	0.05	0.04	0.03	0.03	0.03	0.02
ASS2	0.09	0.05	0.06	0.03	0.06	0.05
ASS3	0.06	0.06	0.07	0.03	0.08	0.05

Covariance Matrix

	TANG2	TANG3	REA1	ASS2	ASS3
TANG2	0.16				
TANG3	0.10	0.22			
REA1	0.07	0.10	0.18		
ASS2	0.03	0.08	0.05	0.20	
ASS3	0.05	0.06	0.05	0.10	0.19

Number of Iterations = 23

LISREL Estimates (Maximum Likelihood)

Measurement Equations

ABILI3 = 0.27*TRUST, Errorvar.= 0.11 , R^2 = 0.40
(0.013)
8.51

BENE1 = 0.31*TRUST, Errorvar.= 0.091 , R^2 = 0.51
(0.039) (0.012)
7.77 7.77

BENE3 = 0.29*TRUST, Errorvar.= 0.095 , R^2 = 0.47
(0.038) (0.012)
7.63 8.18

INTE1 = 0.25*TRUST, Errorvar.= 0.12 , R^2 = 0.34
(0.036) (0.013)

6.75 9.02

INTE2 = 0.30*TRUST, Errorvar.= 0.13 , R^2 = 0.42
(0.035) (0.015)
8.80 8.37

INTE3 = 0.26*TRUST, Errorvar.= 0.14 , R^2 = 0.33
(0.039) (0.016)
6.55 8.86

SATIS1 = 1.00*SATIS, Errorvar.= 0.060 , R^2 = 0.71
(0.017)
3.58

SATIS3 = 0.76*SATIS, Errorvar.= 0.12 , R^2 = 0.42
(0.098) (0.014)
7.75 8.25

LOYAL1 = 1.00*LOYAL, Errorvar.= 0.090 , R^2 = 0.51
(0.011)
8.42

LOYAL2 = 0.83*LOYAL, Errorvar.= 0.077 , R^2 = 0.46
(0.088) (0.0087)
9.33 8.88

LOYAL3 = 1.18*LOYAL, Errorvar.= 0.050 , R^2 = 0.72
(0.12) (0.011)
9.72 4.39

LOYAL4 = 1.04*LOYAL, Errorvar.= 0.072 , R^2 = 0.59
(0.12) (0.012)
8.93 6.09

TANG2 = 0.13*SERQU, Errorvar.= 0.15 , R^2 = 0.100
(0.032) (0.015)
4.03 9.78

TANG3 = 0.23*SERQU, Errorvar.= 0.17 , R^2 = 0.24

(0.035) (0.018)
6.50 9.19

REA1 = 0.15*SERQU, Errorvar.= 0.16 , R^2 = 0.12
(0.033) (0.017)
4.52 9.73

ASS2 = 0.34*SERQU, Errorvar.= 0.086 , R^2 = 0.58
(0.032) (0.015)
10.84 5.94

ASS3 = 0.29*SERQU, Errorvar.= 0.11 , R^2 = 0.45
(0.031) (0.014)
9.46 7.66

Error Covariance for INTE2 and ABILI3 = 0.032
(0.011)
3.02

Error Covariance for INTE3 and BENE1 = 0.027
(0.010)
2.67

Error Covariance for LOYAL3 and SATIS1 = -0.03
(0.0076)
-3.83

Error Covariance for LOYAL4 and LOYAL3 = -0.03
(0.0088)
-3.38

Error Covariance for TANG2 and SATIS1 = -0.02
(0.0080)
-2.98

Error Covariance for TANG3 and TANG2 = 0.069
(0.013)
5.36

Error Covariance for REA1 and BENE3 = -0.03
(0.0087)
-3.09

Error Covariance for REA1 and TANG2 = 0.052
(0.012)
4.44

Error Covariance for REA1 and TANG3 = 0.066
(0.013)
4.95

Error Covariance for ASS3 and INTE1 = 0.025
(0.0094)
2.60

Structural Equations

TRUST = 0.68*SERQU, Errorvar.= 0.54 , R^2 = 0.46
(0.10) (0.14)
6.60 3.88

SATIS = 0.17*TRUST + 0.14*SERQU, Errorvar.= 0.067 , R^2 = 0.56
(0.048) (0.047) (0.018)
3.58 3.01 3.80

LOYAL = 0.043*TRUST + 0.26*SATIS + 0.069*SERQU, Errorvar.= 0.058 , R^2 = 0.38
(0.041) (0.12) (0.042) (0.011)
1.04 2.22 1.67 5.25

Reduced Form Equations

TRUST = 0.68*SERQU, Errorvar.= 0.54, R^2 = 0.46
(0.10)
6.60

SATIS = 0.26*SERQU, Errorvar.= 0.083, R^2 = 0.45
(0.034)

7.72

LOYAL = 0.17*SERQU, Errorvar.= 0.067, R^2 = 0.29
(0.028)
5.92

Correlation Matrix of Independent Variables

SERQU
1.00

Covariance Matrix of Latent Variables

	TRUST	SATIS	LOYAL	SERQU
TRUST	1.00			
SATIS	0.27	0.15		
LOYAL	0.16	0.07	0.09	
SERQU	0.68	0.26	0.17	1.00

Goodness of Fit Statistics

Degrees of Freedom = 103
Minimum Fit Function Chi-Square = 130.57 (P = 0.035)
Normal Theory Weighted Least Squares Chi-Square = 126.01 (P = 0.061)
Estimated Non-centrality Parameter (NCP) = 23.01
90 Percent Confidence Interval for NCP = (0.0 ; 55.56)

Minimum Fit Function Value = 0.64
Population Discrepancy Function Value (F0) = 0.11
90 Percent Confidence Interval for F0 = (0.0 ; 0.27)
Root Mean Square Error of Approximation (RMSEA) = 0.033
90 Percent Confidence Interval for RMSEA = (0.0 ; 0.051)
P-Value for Test of Close Fit (RMSEA < 0.05) = 0.93

Expected Cross-Validation Index (ECVI) = 1.11

90 Percent Confidence Interval for ECVI = (1.00 ; 1.27)
ECVI for Saturated Model = 1.50
ECVI for Independence Model = 6.77

Chi-Square for Independence Model with 136 Degrees of Freedom = 1347.01
Independence AIC = 1381.01
Model AIC = 226.01
Saturated AIC = 306.00
Independence CAIC = 1454.50
Model CAIC = 442.16
Saturated CAIC = 967.42

Normed Fit Index (NFI) = 0.90
Non-Normed Fit Index (NNFI) = 0.97
Parsimony Normed Fit Index (PNFI) = 0.68
Comparative Fit Index (CFI) = 0.98
Incremental Fit Index (IFI) = 0.98
Relative Fit Index (RFI) = 0.87

Critical N (CN) = 218.64

Root Mean Square Residual (RMR) = 0.0082
Standardized RMR = 0.043
Goodness of Fit Index (GFI) = 0.93
Adjusted Goodness of Fit Index (AGFI) = 0.90
Parsimony Goodness of Fit Index (PGFI) = 0.63

Standardized Solution

LAMBDA-Y

	TRUST	SATIS	LOYAL
ABILI3	0.27	- -	- -
BENE1	0.31	- -	- -
BENE3	0.29	- -	- -
INTE1	0.25	- -	- -

INTE2	0.30	- -	- -
INTE3	0.26	- -	- -
SATIS1	- -	0.39	- -
SATIS3	- -	0.29	- -
LOYAL1	- -	- -	0.31
LOYAL2	- -	- -	0.25
LOYAL3	- -	- -	0.36
LOYAL4	- -	- -	0.32

LAMBDA-X

	SERQU
TANG2	0.13
TANG3	0.23
REA1	0.15
ASS2	0.34
ASS3	0.29

BETA

	TRUST	SATIS	LOYAL
TRUST	- -	- -	- -
SATIS	0.45	- -	- -
LOYAL	0.14	0.33	- -

GAMMA

	SERQU
TRUST	0.68
SATIS	0.37
LOYAL	0.23

Correlation Matrix of ETA and KSI

	TRUST	SATIS	LOYAL	SERQU
TRUST	1.00			

SATIS	0.69	1.00		
LOYAL	0.52	0.58	1.00	
SERQU	0.68	0.67	0.54	1.00

PSI
Note: This matrix is diagonal.

TRUST	SATIS	LOYAL
0.54	0.44	0.62

Regression Matrix ETA on KSI (Standardized)

	SERQU
TRUST	0.68
SATIS	0.67
LOYAL	0.54

Completely Standardized Solution

LAMBDA-Y

	TRUST	SATIS	LOYAL
ABILI3	0.63	- -	- -
BENE1	0.71	- -	- -
BENE3	0.68	- -	- -
INTE1	0.58	- -	- -
INTE2	0.65	- -	- -
INTE3	0.57	- -	- -
SATIS1	- -	0.85	- -
SATIS3	- -	0.65	- -
LOYAL1	- -	- -	0.72
LOYAL2	- -	- -	0.68
LOYAL3	- -	- -	0.85
LOYAL4	- -	- -	0.77

LAMBDA-X

	SERQU
TANG2	0.32
TANG3	0.49
REA1	0.35
ASS2	0.76
ASS3	0.67

BETA

	TRUST	SATIS	LOYAL
TRUST	- -	- -	- -
SATIS	0.45	- -	- -
LOYAL	0.14	0.33	- -

GAMMA

	SERQU
TRUST	0.68
SATIS	0.37
LOYAL	0.23

Correlation Matrix of ETA and KSI

	TRUST	SATIS	LOYAL	SERQU
TRUST	1.00			
SATIS	0.69	1.00		
LOYAL	0.52	0.58	1.00	
SERQU	0.68	0.67	0.54	1.00

PSI

Note: This matrix is diagonal.

	TRUST	SATIS	LOYAL

0.54 0.44 0.62

THETA-EPS

	ABILI3	BENE1	BENE3	INTE1	INTE2	INTE3
ABILI3	0.60					
BENE1	- -	0.49				
BENE3	- -	- -	0.53			
INTE1	- -	- -	- -	0.66		
INTE2	0.16	- -	- -	- -	0.58	
INTE3	- -	0.14	- -	- -	- -	0.67
SATIS1	- -	- -	- -	- -	- -	- -
SATIS3	- -	- -	- -	- -	- -	- -
LOYAL1	- -	- -	- -	- -	- -	- -
LOYAL2	- -	- -	- -	- -	- -	- -
LOYAL3	- -	- -	- -	- -	- -	- -
LOYAL4	- -	- -	- -	- -	- -	- -

THETA-EPS

	SATIS1	SATIS3	LOYAL1	LOYAL2	LOYAL3	LOYAL4
SATIS1	0.29					
SATIS3	- -	0.58				
LOYAL1	- -	- -	0.49			
LOYAL2	- -	- -	- -	0.54		
LOYAL3	-0.15	- -	- -	- -	0.28	
LOYAL4	- -	- -	- -	- -	-0.17	0.41

THETA-DELTA-EPS

	ABILI3	BENE1	BENE3	INTE1	INTE2	INTE3
TANG2	- -	- -	- -	- -	- -	- -
TANG3	- -	- -	- -	- -	- -	- -
REA1	- -	- -	-0.15	- -	- -	- -
ASS2	- -	- -	- -	- -	- -	- -
ASS3	- -	- -	- -	0.13	- -	- -

THETA-DELTA-EPS

	SATIS1	SATIS3	LOYAL1	LOYAL2	LOYAL3	LOYAL4
TANG2	-0.13	- -	- -	- -	- -	- -
TANG3	- -	- -	- -	- -	- -	- -
REA1	- -	- -	- -	- -	- -	- -
ASS2	- -	- -	- -	- -	- -	- -
ASS3	- -	- -	- -	- -	- -	- -

THETA-DELTA

	TANG2	TANG3	REA1	ASS2	ASS3
TANG2	0.90				
TANG3	0.37	0.76			
REA1	0.30	0.33	0.88		
ASS2	- -	- -	- -	0.42	
ASS3	- -	- -	- -	- -	0.55

Regression Matrix ETA on KSI (Standardized)

	SERQU
TRUST	0.68
SATIS	0.67
LOYAL	0.54

Time used: 0.281 Seconds

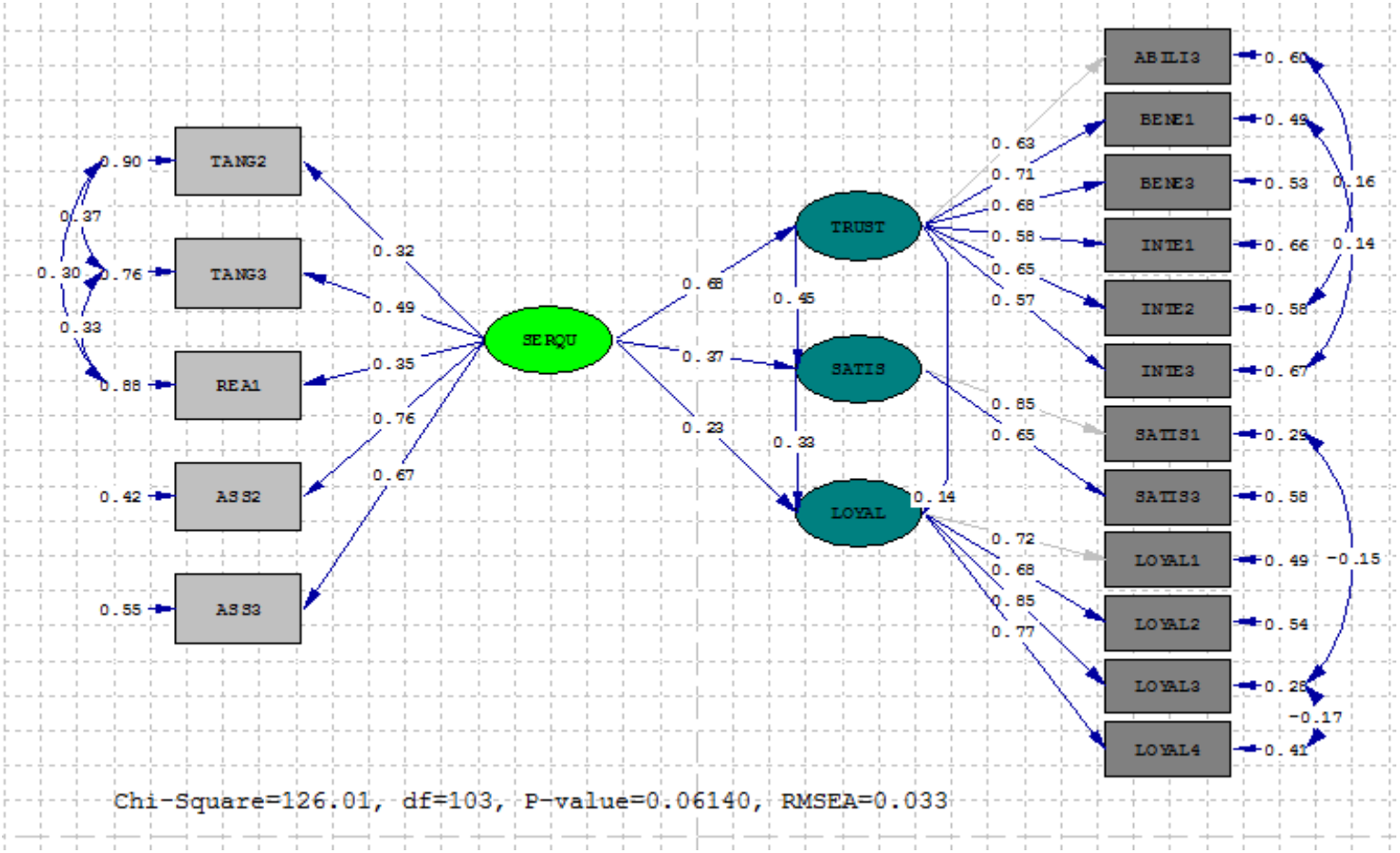

Gambar Path Diagram *Standardized Solution*

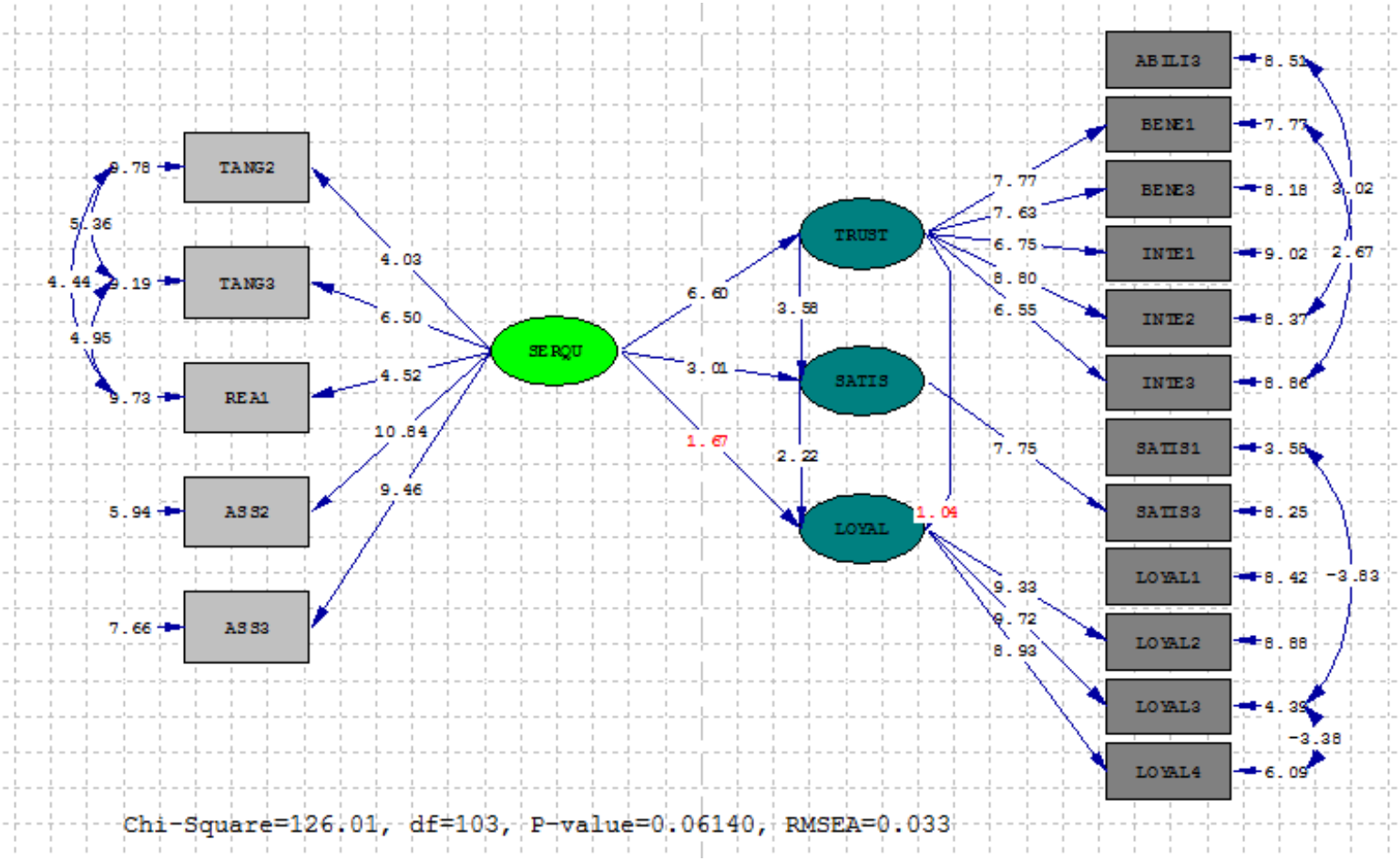

Gambar Path Diagram *T* - *Value*

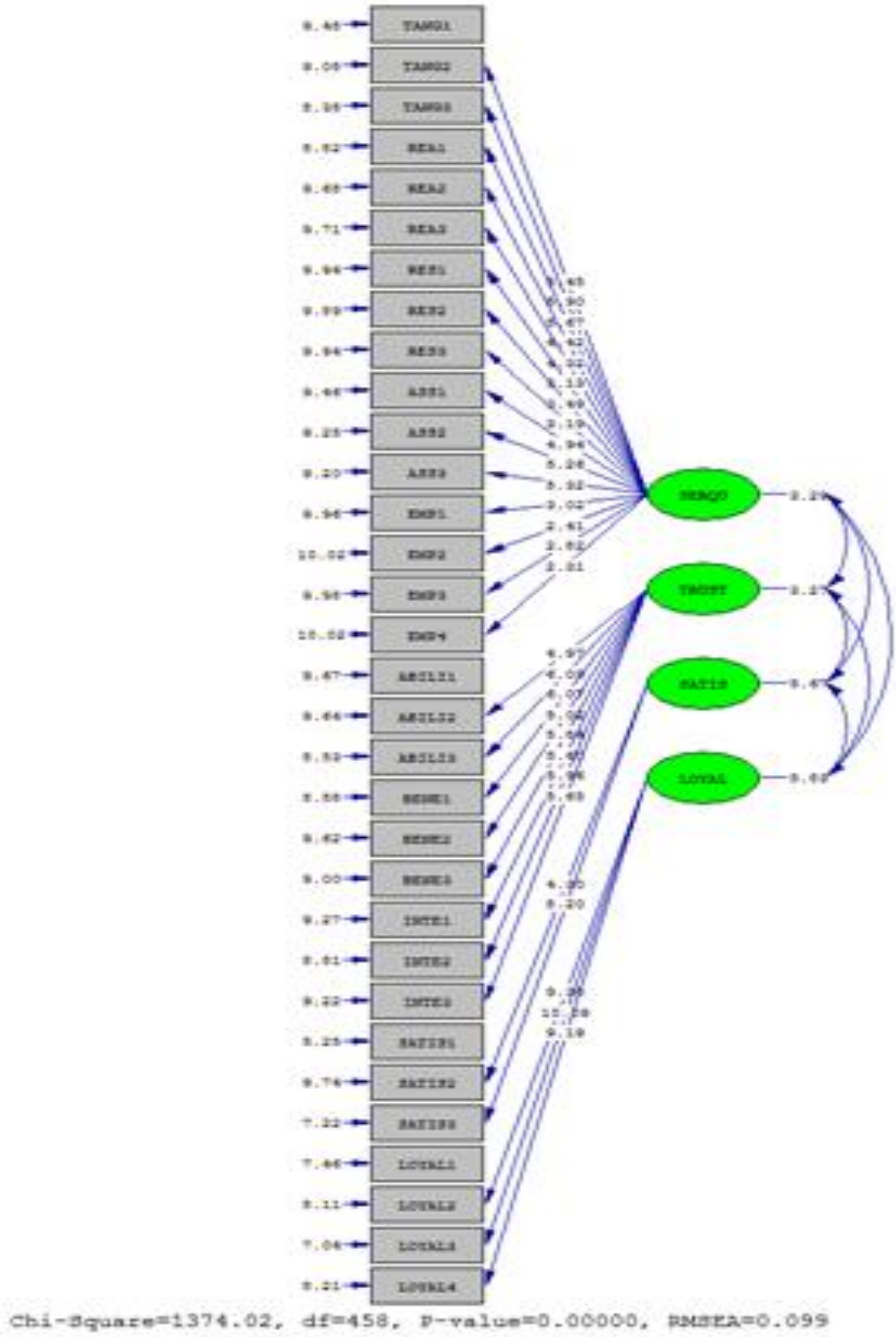

Gambar Path Diagram pengukuran validitas *indicator* order *construst*

Standardized Solution

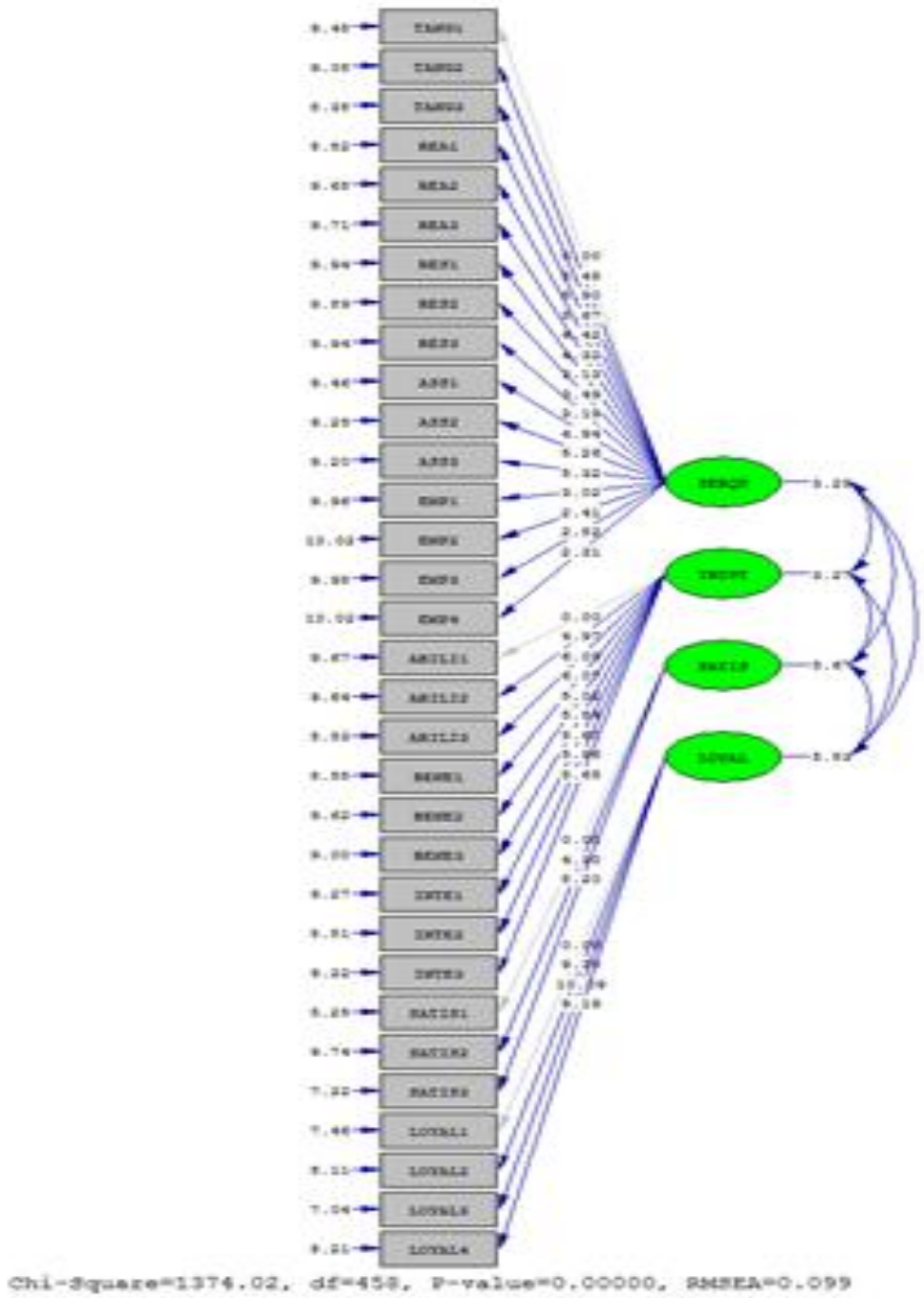

Gambar Path Diagram pengukuran validitas indicator order *construct T - Value*

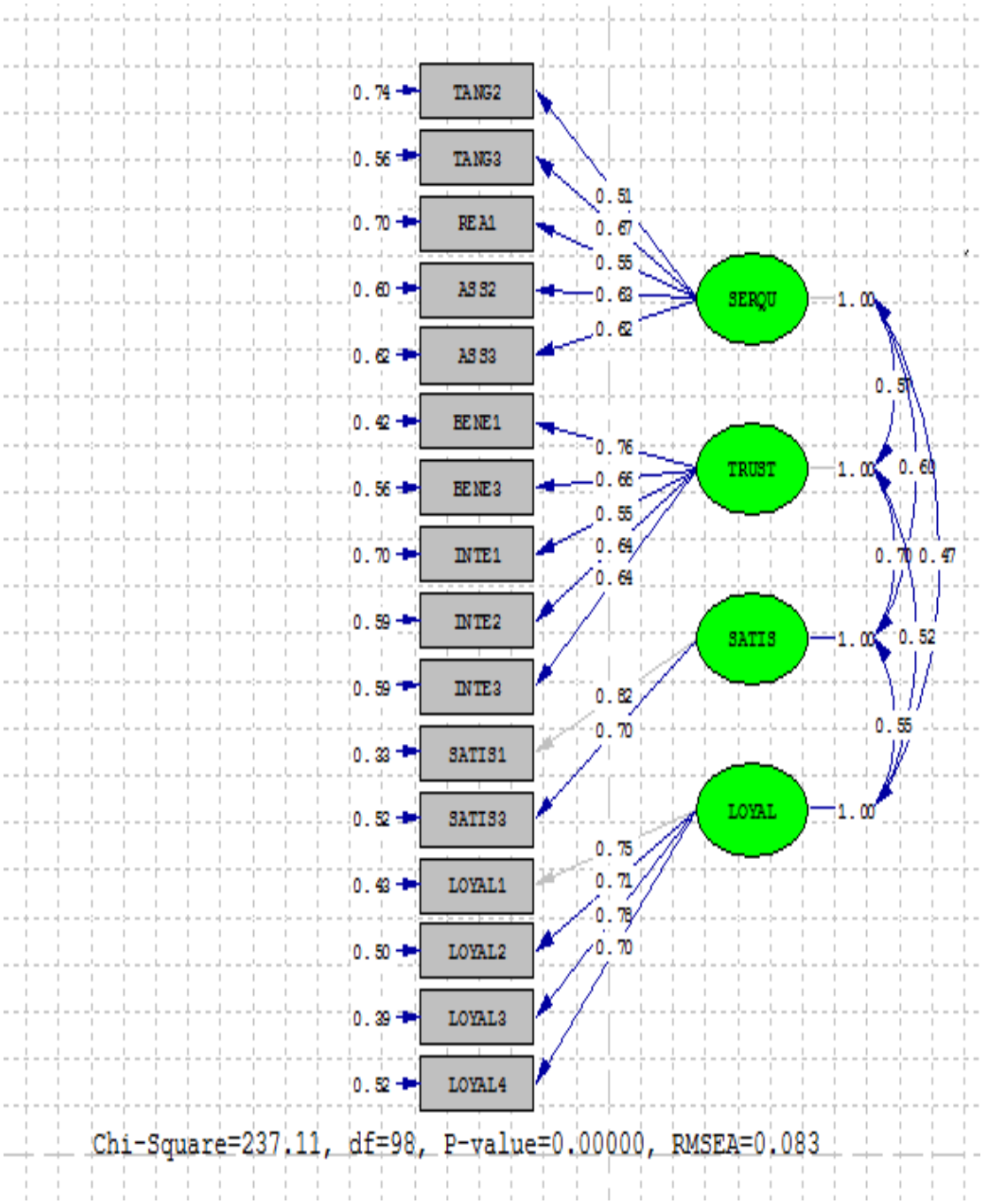

Gambar Path Diagram pengukuran *construct reliability* dan *variance extracted Standardized Solution*